BNC

INSTRUCTION MANUAL

MP MASTER
MA31867

Light Pulse Generator

Model 6030

INSTRUCTION MANUAL

BERKELEY NUCLEONICS CORPORATION
1121 Regatta Square, Richmond, CA 94804 • Phone: (415) 234-1100

Warranty

Berkeley Nucleonics Corporation warrants all instruments, including component parts, to be free from defects in material and workmanship, under normal use and service for a period of one year. If repairs are required during the warranty period, contact the factory for component replacement or shipping instructions. Include serial number of the instrument. This warranty is void if the unit is repaired or altered by others than those authorized by the Berkeley Nucleonics Corporation.

©1982, Berkeley Nucleonics Corporation

CONTENTS

FRONT MATTER		Title Page	page	i
		Warranty		ii
		Contents		iii
		Frontispiece		vi
SECTION	1	SPECIFICATIONS		1
SECTION	2	OPERATING INFORMATION		2
	2.1	General Information		2
	2.1.1	Power-up		2
	2..2	Safety		2
	2.2.1	Labels		3
	2.3	Operating controls, Indicators and Connectors		4
	2.3.1	Frequency Switch		4
	2.3.2	Frequency Vernier Control		4
	2.3.4	Delay Vernier Control		4
	2.3.5	Width Switch		4
	2.3.6	Width Vernier Control		5
	2.3.7	Overlap Indicator Light		5
	2.3.8	Power Level Digital Display		5
	2.3.9	Baseline Control		5
	2.3.10	Read Pushbutton		5
	2.3.11	Peak Control		5
	2.3.12	Mode Switch		6
	2.3.13	Power Off-On Switch		6
	2.3.14	Trigger Level Control		6
	2.3.15	Trigger Slope Switch		6
	2.3.16	Single Pulse-Double Pulse Switch		7
	2.3.17	External Trigger/Drive Connector		7
	2.3.18	Trigger Output Connector		7
	2.3.19	Pulse Output Connector		7
	2.3.20	External Modulation Connector		7
	2.3.21	Light Output Connector		7
	2.3.22	Laser Active Indicator Light		7
	2.3.23	Laser Guard Indicator Light		7
	2.3.24	Line Voltage Switch		8

- CONTENTS -

SECTION	3	THEORY OF OPERATION	9
	3.1	Block Diagram	9
	3.2	Circuit Description	10
	3.2.1	Interconnection Diagram	10
	3.2.2	Timing-Frequency Circuits	11
	3.2.2.1	100 MHz Rep-Rate Generator	11
	3.2.3	Timing Circuits	12
	3.2.3.1	External Trigger / Drive Circuit	13
	3.2.4	Timing-Delay-Width Circuits	15
	3.2.4.1	Delay Generator	15
	3.2.4.2	Overlap	16
	3.2.4.3	Square Wave	17
	3.2.4.4	Width	17
	3.2.5	Laser Driver	17
	3.2.5.1	Digital Control Circuits	18
	3.2.5.2	Laser Module	19
	3.2.5.3	CW	20
	3.2.5.4	Baseline	21
	3.2.5.5	Pre-Bias and Zero Bias Modes	21
	3.2.5.5.1	Pre-Bias	22
	3.2.5.5.2	Zero Bias	23
	3.2.5.6	Impulse	24
	3.2.5.7	Laser Guard	25
	3.2.6	Display	25
	3.2.7	Power Supply	26
	3.3	Internal Controls	27
SECTION	4	MAINTENANCE	28
	4.1	Fan Filter	28
	4.2	Light Output Connector	28
SECTION	5	PARTS LIST AND SCHEMATICS	
		Parts List	
		Mother Board	6020-1 (649-131)
		Power Supply Board	6020-3 (649-094)
		Driver Board	6030-1 (649-132)

- CONTENTS -

Display Board	6020-2	(649-093)
Front Panel Assembly		(640-017)
Rear Panel Assembly		(640-018)
Top Assembly		(801-076)

Schematics

Interconnection Diagram	6030-29
Timing-Frequency Circuits	6030-30
Timing Circuits	6030-31
Timing-Delay-Width Circuits	6030-32
Pulse Out Equalizer	6030-33
Laser Driver Circuit	6030-34
Display Circuit	6030-35
Laser Guard Recovery Circuits	6030-36
Power Supply Circuit	6030-37

Light Pulse Generator
Model 6030

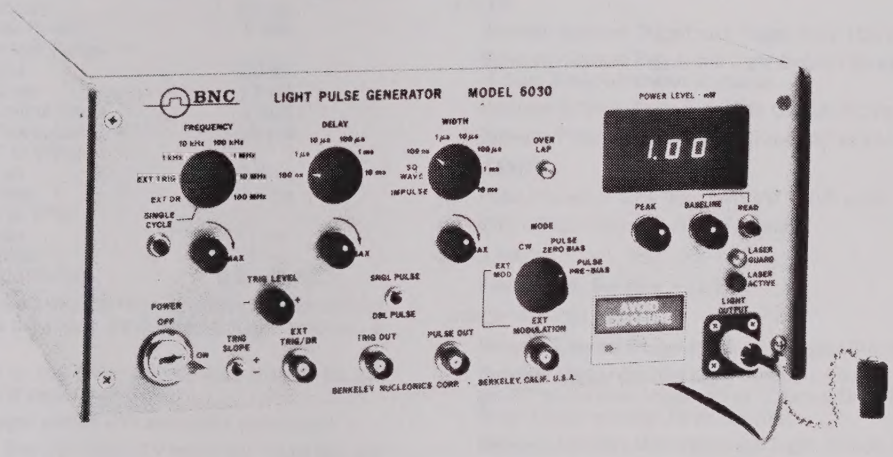

The Model 6030 is a high speed light pulse generator with built-in power metering. It can supply a 1310 nm or 1550 nm optical output and be field-converted between these two wavelengths. The instrument provides a varied selection of features generally associated only with elaborate electronic pulse generators, and brings to the electro-optics field a flexible means of controlling light with precision and ease.

The 6030 can operate at frequencies up to 800 MHz, has half-nanosecond rise time and generates impulses as short as 400 ps wide. The user can vary the pulse delays and widths, generate single or double pulses, externally trigger, drive or modulate the light output, determine bi-level optical output power and more.

The instrument serves as low jitter, calibrated light source that digitally displays pulse baseline and peak power levels, both adjustable with 0.1% resolution. A laser diode is the internal light-emitting source. The laser-generated light is steadily monitored and regulated with sensing and feedback circuits that keep the instrument's light intensity under constant control.

An electronic output coincident with light pulse timing is available that can be used to trigger other equipment, or viewed on an oscilloscope.

Digitized by the Internet Archive
in 2026

https://archive.org/details/manualsplus_13268

SECTION 1

SPECIFICATIONS

OPERATING MODES

Pulse Zero Bias, Pulse Pre-Bias or CW; Single or Double Pulse; Internal Trigger, External Trigger, External Drive or External Modulation; Square Wave or Impulse.

OUTPUT DETAILS

Light Output:	Model 6030A	Model 6030B
Spectral Peak (nominal)	1310 nm	1550 nm
Spectral Bandwidth	±1 nm	
Maximum Peak Power	1 mW	
Power Adjustment Range		
Pulse Pre-Bias	20 dB	
Pulse Zero Bias	13 dB	
Maximum Baseline Power	1 mW	
Power Level Resolution	10 μW	
Rise Time(10 to 90%)		
Pulse Pre-Bias	0.5 ns	
Pulse Zero Bias	0.5 ns	
Fall Time(90 to 10%)		
Pulse Pre-Bias	1 ns	
Pulse Zero Bias	1 ns	
Temperature Coefficient	0.05 dB/°C	

Square Wave: Rate 40 Hz to 50 MHz with internal or external rep rate control; 50% duty cycle. Each external trigger produces a transition.

Impulse: Rate 0 to 100 MHz; 400 ps wide (fixed); 50 μW baseline and 1 mW peak levels (fixed).

CW: Continuous light output with adjustable power level.

Trigger Out: Rate 0 to 100 MHz; 3 V into 50Ω; <3 ns rise and fall time; 5 ns wide.

Pulse Out: Rate 0 to 100 MHz; 3 V into 50Ω; <3 ns rise and fall time; 5 ns minimum width.

PULSE BIAS CONDITIONS

Pulse Pre-Bias: Baseline residual light level in "off" state adjustable 50 μW to 1 mW; Peak level adjustable 50 μW to 1 mW.

Zero Bias: No residual light output in "off" state. Peak level adjustable 50 μW to 1 mW.

TRIGGER MODES

Internal: Rate 100 Hz to 100 MHz. Continuously adjustable through six ranges.

External Trigger: Rate 0 to 100 MHz; 5 ns minimum width; 300 mV minimum amplitude, 10 V maximum; 50Ω input impedance. Trigger level control ±2 V, continuously adjustable. Positive or negative slope selection.

External Drive: Pre-Bias rate 0 to 300 MHz; Zero Bias rate 0 to 200 MHz; 5 ns minimum width; 300 mV minimum amplitude, 10 V maximum; 50Ω input impedance. Trigger level control ±2 V, continuously adjustable. Positive or negative slope selection.

Single Cycle: Panel pushbutton.

EXTERNAL MODULATION

Frequency 100 Hz to 800 MHz −3 dB. 50Ω nominal input impedance. Maximum DC level ±2 V. Sensitivity 200 mV rms/mW. Total harmonic distortion of 0.5 mW average light level with 0.5 mW rms modulation <20dB below fundamental.

DELAY RANGE

5 ns to 10 ms continuously adjustable through six ranges.

WIDTH RANGE

5 ns to 10 ms continuously adjustable through six ranges. Maximum width not limited in External Drive. Also see Impulse width specification.

JITTER

Between External Trigger and Trigger Out: 100 ps rms.

Between External Trigger and Light Output: 50 ps rms or 0.1% of delay time, whichever is greater.

Between External Drive and Light Output: 30 ps rms.

Between Pulse Out and Light Output: 30 ps rms.

LINEARITY

Pulse Modes: ±10% from 100 μW to full scale.

CW: ±0.5% from 50 μW to full scale.

ACCURACY

Peak ±1dB; Baseline ±1dB.

INSERTION DELAYS

Between External Trigger or Drive and Trigger Out: 30 ns (fixed).

Between Trigger Out and Light Output in (mode): Internal Trigger 40 ns; External Trigger 40 ns; External Drive 15 ns; Square Wave 15 ns; Impulse 15 ns (all fixed).

Between External Modulation and Light Output: 5 ns (fixed).

Between Pulse Out and Light Output: 0 ±2 ns (fixed).

LIGHT OUTPUT CONNECTOR

Biconic, single-mode fiber; 9/125 μm; .12 NA.

DIMENSIONS

Cabinet: 12" W x 5¼" H x 18¾" D (305 x 133 x 408 mm).
Rack: 19" W x 5¼" H x 18¾" D (483 x 133 x 408 mm).

WEIGHT

Cabinet: 19 lbs. net (8.6 kg); 24 lbs. shipping (10.9 kg).
Rack: 19.5 lbs. net (8.9 kg); 24.5 lbs. shipping (11.1 kg).

AMBIENT

10°C to 40°C (45°F to 104°F).

POWER

115/230 V, ±10%; 50/60 Hz; 80 W.

OPTION

R: Rack Mounting.

ACCESSORIES

P/N 6835: Pigtail Cable. Two meters, single-mode fiber; 9/125 μm. Terminated at one end with a Biconic connector.

P/N 6836: Plug-in Assembly. Provides 1550 nm operation for Model 6030A.

P/N 6837: Plug-in Assembly. Provides 1310 nm operation for Model 6030B.

SECTION 2

OPERATING INFORMATION

2.1 GENERAL INFORMATION

2.1.1 POWER-UP

Operation of the Model 6030 is similar to that of a standard pulse generator with additional controls for operating the laser. The user should become familiar with the pulse generator controls first, using an oscilloscope connected to the PULSE OUT connector. Operation using an external trigger source should also be tried.

A single mode 9/125 micron fiber with a biconical connector can then be connected to the LIGHT OUTPUT connector. The far end should be connected to the user's light system or to a fast light detector. Light output can be controlled using the MODE switch, BASELINE and PEAK controls. It can be modulated as desired by use of the pulse generator controls.

Light output starts after 3 seconds and reaches the programmed level in about 6 seconds provided that the unit is triggered, self-triggered or in CW mode.

2.1.2 ELECTRICAL CABLES, ATTENUATORS AND OSCILLOSCOPES

The electrical signal inputs and outputs have fast rise and fall times containing frequency components far in excess of 100 MHz. All signal handling components such as loads, cables, attenuators, connectors and oscilloscopes should have a response exceeding 100 MHz and preferably 350 MHz. Cable and load impedance mismatch will cause signal reflections and result in distorted waveforms and measurement errors. Some sampling oscilloscopes will require attenuators to protect their inputs.

2.2 SAFETY

Laser light emitted from the end of a connected light fiber is invisible. Fibers should be terminated in a system which will not allow human exposure to this radiation. Do not stare into the beam or into a beam from a reflecting surface. Use of controls or

adjustments or performance procedures other than those specified herein may result in hazardous exposure.

Always keep the LIGHT OUTPUT connector covered with the screw-on dust cap when a fiber is not attached in order to keep the connector as clean as possible.

2.2.1 LABELS

The following labels are attached to the instrument.

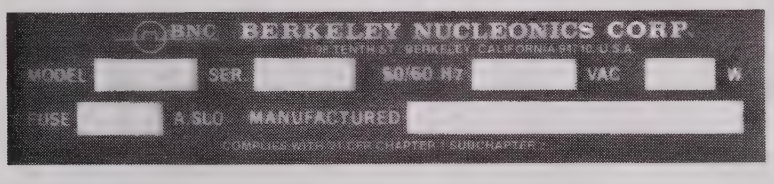

Certification label on rear panel.

Aperture label by LIGHT OUTPUT

Labels for noninterlocked connectors located inside the cabinet.

2.3 OPERATING CONTROLS, INDICATORS and CONNECTORS

2.3.1 FREQUENCY SWITCH

The SINGLE CYCLE position disables the frequency generator and allows the SINGLE CYCLE pushbutton switch to initiate one light output pulse each time that the button is depressed.

The EXT DR position allows the light output to correspond to the rate and width of a pulse train entering the EXT TRIG/DR connector. Light output power levels are controlled by the PEAK and BASELINE controls in PRE-BIAS mode. In the 0 BIAS mode power level is controled by the PEAK control.

The EXT TRIG position allows trigger signals entering the EXT TRIG/DR connector to generate light output pulses, one for each trigger input signal.

Six FREQUENCY ranges activate the internal frequency generator to produce light output pulses at the selected rep-rate.

2.3.2 FREQUENCY VERNIER CONTROL

This three-turn potentiometer provides a 12:1 control over each range. Full clockwise corresponds to the value selected by the range control.

2.3.3 DELAY SWITCH

Six DELAY ranges set the interval between the leading edges of the trigger output and the light output pulses when in the SINGLE PULSE mode. In the DOUBLE PULSE mode, the DELAY setting determines the interval between the leading edges of these light pulses.

2.3.4 DELAY VERNIER CONTROL

This three-turn potentiometer provides a 15:1 control over each range. Full clockwise corresponds to the value selected by the range control

2.3.5 WIDTH SWITCH

The IMPULSE position produces pre-biased impulses of light output. The frequency range extends to 100 MHz.

The SQ WAVE position produces light output pulses with a 50% duty factor which can be internally or externally triggered over a frequency range of 0 Hz to 100 MHz. Each trigger causes a single power level transition thus producing an square wave of up to 50 MHz..

Six WIDTH ranges control the light output pulse width when using the internal frequency generator, external triggers or the SINGLE CYCLE mode.

2.3.6 WIDTH VERNIER CONTROL

This three-turn potentiometer provides a 15:1 continuous control over pulse width on each range.

2.3.7 OVERLAP LIGHT

This indicator lights if pulse width and/or delay exceeds the repetition period.

2.3.8 POWER LEVEL DIGITAL DISPLAY

This readout displays the light power applied to the LIGHT OUTPUT connectors as follows:

In the PULSE modes the peak power is indicated.
Depressing the READ button will indicate baseline power.
In the CW mode the steady level of power is indicated.
In the EXT MOD mode average power is indicated.

2.3.9 BASELINE CONTROL

This three-turn potentiometer provides continuous control over the baseline light power output when in the PRE-BIAS mode.

2.3.10 READ PUSHBUTTON

Depress this button to display light output baseline power level.

2.3.11 PEAK CONTROL

This ten-turn potentiometer provides continuous control over light power delivered to

the LIGHT OUTPUT connector as follows:

In the PULSE mode the peak flat top level is controlled.

In the CW mode the steady level of power is controlled.

In the EXT MOD mode average power is controlled.

2.3.12 MODE SWITCH

Note that switching to a new position causes the LASER GUARD to activate briefly, thus allowing a soft turn-on. The EXT MOD position allows modulation of the light output with analog or digital signals applied to the EXT MOD connector. The PEAK control adjusts average light output.

The CW position produces a steady light output power that is adjustable in power level with the PEAK control.

The PULSE ZERO BIAS position produces light output pulses with no residual light in the "off" state.

The PULSE PRE-BIAS position produces light output pulses with a preset amount of residual baseline power in the "off" state. The baseline power is set with the BASELINE control.

2.3.13 POWER ON/OFF SWITCH

This key switch controls line power applied to the instrument. After actuation, light output will be available in three or four seconds. The key can be removed only in the "off" position.

2.3.14 TRIGGER LEVEL CONTROL

This potentiometer controls the voltage level at which the instrument will trigger. The threshold level can be continuously controlled from -2 to +2 V.

2.3.15 TRIGGER SLOPE SWITCH

This toggle switch determines whether the instrument will trigger on a negative-going or positive-going signal transition.

2.3.16 SINGLE PULSE - DOUBLE PULSE SWITCH

The SINGLE PULSE position generates one light pulse after each trigger. The DOUBLE PULSE position generates a pair of light output pulses for each trigger. The first pulse is coincident with the trigger and the second is determined by the DELAY setting. Both pulse widths are determined by the WIDTH control.

2.3.17 EXTERNAL TRIGGER/DRIVE CONNECTOR

This connector provides for external trigger or drive signals. Input impedance is 50 Ohms.

2.3.18 TRIGGER OUT CONNECTOR

This connector provides a narrow, positive pulse coincident with trigger. It must be terminated with 50 Ohms, preferably at the far end of a 50 Ohm cable.

2.3.19 PULSE OUT CONNECTOR

This connector provides a pulse coincident with the light output pulse. It must be terminated with 50 Ohms, preferably at the far end of 50-Ohm cable.

2.3.20 EXTERNAL MODULATION CONNECTOR

External signals connected here can modulate the instantaneous light output power level. Input impedance is 50 Ohms.

2.3.21 LIGHT OUTPUT CONNECTOR

The user's fiber-optic cable connector is attached here for pickup of the light output. A cap is provided to keep dust out of the connector.

2.3.22 LASER ACTIVE LIGHT

This indicator will light if it is possible to obtain a controlled light output.

2.3.23 LASER GUARD LIGHT

This indicator will light if the laser is being protected from an unsafe power output

level, whenever the MODE switch is repositioned and when the unit is first turned on.

2.3.24 LINE VOLTAGE LEVEL SWITCH

This rear panel switch allows selection of 115 or 230 V line operation. Line frequency can be either 50 or 60 Hz.

SECTION 3

THEORY OF OPERATION

3.1 BLOCK DIAGRAM

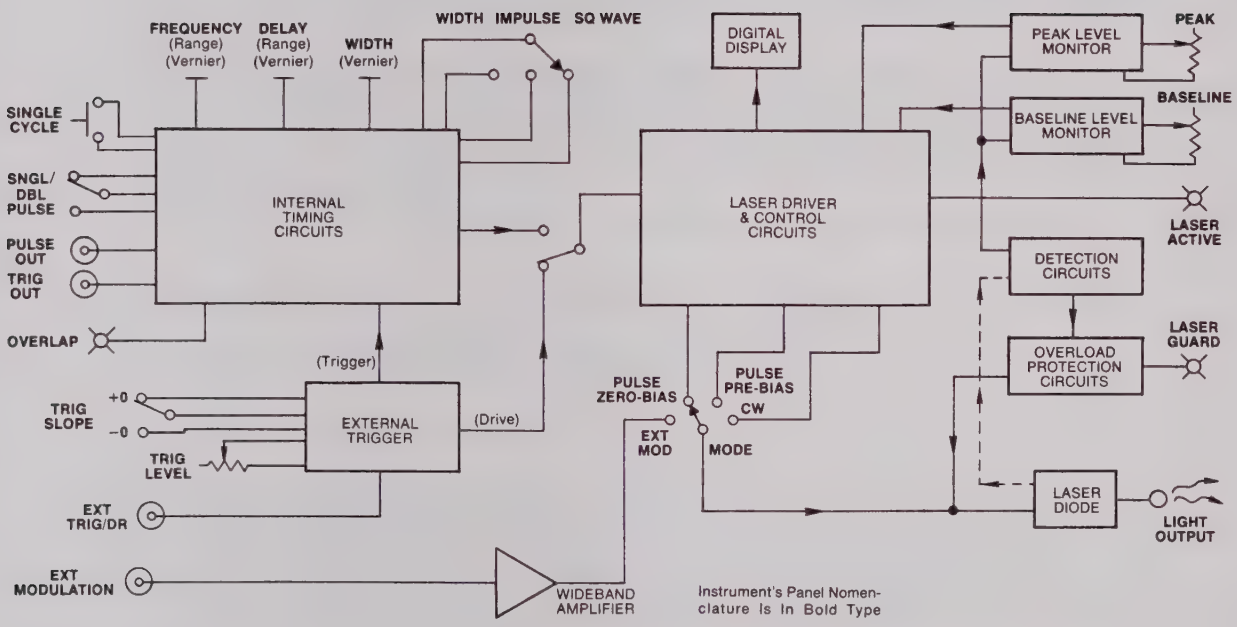

The Model 6030 is a fast, general-purpose light pulse generator with built-in power monitoring and internal feedback that maintains preset optical power levels in spite of changes in temperature, duty factor and aging that would otherwise affect the output of the laser source. The controls provide features similar to those found in many conventional electronic pulse generators with the exception that the main output is optical rather than electrical. The Block Diagram shows the functional divisions of the instrument and depicts the various controls, inputs, outputs and indicators.

Five parameters of the light output can be varied as follows; rep-rate, delay, pulse width, pulse baseline and peak power levels (amplitude). These can be controlled by front panel switches and potentiometers. The instrument has an external modulation feature that permits convenient electrical-to-optical conversion various signals.

The blocks labeled INTERNAL TIMING CIRCUITS and EXTERNAL TRIGGER illustrate the arrangement by which rep-rate, delay and width are controlled. The LASER DRIVE and CONTROL CIRCUITS block receives timing signals from either the EXTERNAL TRIGGER shaper or the INTERNAL TIMING CIRCUITS. During the pulse modes, these signals determine when the laser turns "on" and "off."

Another source of drive is the Wideband Amplifier that causes the optical power to follow an analog signal applied to the EXT MOD connector. In this case, the optical output is directly modulated by the electrical input.

CW mode generates a steady "DC" level set by the PEAK control.

There are two pulse bias modes: ZERO BIAS and PRE-BIAS. In the ZERO BIAS mode the Laser is turned completely "off" during the period between drive signals and the PEAK control varies the peak level. In the PRE-BIAS mode, the light level between drive signals may also be varied via the BASELINE control.

The block labeled OVERLOAD PROTECTION acts to bypass the laser in the even of a potentially damaging situation. If the laser is programmed for excessive current or if a driver component fails in such a way as to cause excessive drive current, this circuit is activated. It also responds when the MODE switch is changed to a new position.

The LASER ACTIVE light indicates that the laser is either emitting power or is about to. The LASER GUARD light notifies the operator that the laser is momentarily disabled or, if it does not extinguish, that a malfunction has occurred.

3.2 CIRCUIT DESCRIPTION

3.2.1 INTERCONNECTION DIAGRAM (Schematic 6030-29)

This diagram depicts all of the signal and control circuits for the Model 6030. There are four printed circuit boards in the instrument. These are assigned numbers such as PCB

6020-3 which is the designation for the Power Supply board. The Laser Driver Board plugs into a 50-pin connector situated on the "mother board. On the interconnection diagram, the pin numbers are shown in a convenient order while on the actual board they are arranged sequentially.

The numbered terminals along the top of the Timing Circuits board provide connections to the various potentiometers and switches that control the timing circuits. As an example, the three wires that connect the Trigger Level potentiometer to the timing circuits are routed via terminals 36, 37 and 38. There are several high-speed signals that enter or leave via coax cables. These cables, in addition to carrying the signals from point-to-point, allow small timing adjustments to properly align certain pulses.

Q30 is used to provide a logic HI level to enable the appropriate AND gates in the Driver Control circuits. (See Dwg 6030-34.) The collector of Q30 is normally at ground. If the switch is moved, the emitter circuit will be momentarily opened, allowing the collector to generate a positive signal.

3.2.2 TIMING-FREQUENCY CIRCUITS (Schematic 6030-30)

3.2.2.1 100 MHz REP-RATE GENERATOR

This circuit generates pulses at rates from less than 100 Hz to more than 100 MHz. There are five switch-selectable decade ranges and a continuously adjustable vernier control covering more than a decade. The decades are selected by choosing taps in a digital count chain. The vernier controls the period of a free-running relaxation oscillator which only operates over the fastest decade.

Z3A is an OR/NOR gate oscillator which utilizes RC timing to determine its frequency. C1 and the resistor network R1, R2 and R801 form the timing circuit. R801 is varied to change the time constant and thus the frequency. R8 damps the parasitic circuit inherent in the leads to R801. R1 is adjusted so that the highest frequency (R801 clockwise) is approximately 105 Mhz. R2 sets the lowest frequency (R801) counterclockwise) at approximately 8 MHz.

Z3B is a buffer stage to isolate the oscillator from the effects of external loading. The first counter, Z2, is a MECL decade divider whose output is translated by Q1 to TTL levels and the two remaining stages, Z1 and Z2, are dual decade dividers.

The right hand section (pin 18) of S801 connects one of the six outputs, including the oscillator itself, to the output buffer, Z5. The pulse then appears at Z5-2. Note from Table 1 that the TTL counters are operated between -5.2 V and ground. This is to facilitate the coupling into the output buffer which is a MECL device. CR5, 6, 7 and 8 assure that the normal MECL high level is not exceeded by the TTL drive signals and that, instead, the high at Z5-2 is determined only by R17 and R18.

The oscillator, Z3A, and the counter, Z4, receive enabling signals when the internal frequency generator is to be utilized. For the oscillator to be enabled, both pin 9 and 10 of Z3A must be LO. Input J2-14 is LO when the Mode switch (S806) is in the Zero Bias, Pre-Bias, or Impulse positions (Dwg 6030-34). This conditionally enables Z3-10. Z3-9 is enabled by a negative signal via CR1/2 when the Frequency switch (801) is in any of the upper six positions. The oscillator is not enabled if either the Mode switch or the Frequency switch is not in the positions listed above. Additionally, the counter is only enabled when a frequency of 10 MHz or lower is selected. Otherwise, a negative level is applied to Z4-9 via CR3 forcing a reset condition which disables the entire count chain.

3.2.3 TIMING CIRCUITS (Schematic 6030-31)

The Timing Circuits perform functions similar to those of a conventional pulse generator and the front panel controls are arranged in the same groupings found on most pulse generators. There are three sources of triggers for the timing circuits.

1. A repetition rate generator provides a source of internally generated triggers, the frequency of which may be controlled from 100 Hz to 100 MHz by means of decade switches and a continuous vernier control.

2. The circuit that processes the external signal is also part of the timing circuits. The polarity and trigger level of the input waveform may be selected by front panel controls.

3. A pushbutton initiates a single cycle of operation. Delay and width circuits provide six decades of continuously adjustable control of the output pulse irrespective of which of the three trigger sources was used. A double-pulse feature allows a pair of pulses to be generated whose separation is determined by the delay controls.

The External Drive mode causes the output pulse width to be equal to that of the

external input.

The Square Wave mode produces 50% duty factor output pulses at 1/2 the trigger rate.

The Impulse output is a very narrow pulse (approx. 0.5 ns) which can be used for reflectometer applications.

The timing circuit also generates a signal that indicates if the Frequency, Delay and Width controls have been set in an inconsistent manner. This signal is used to operate the front panel Overlap indicator.

3.2.3.1 EXTERNAL TRIGGER/DRIVE CIRCUIT

The thresholding function is performed by the high-speed AMD685 comparator, Z22. The trigger level is controlled by TRIG LEVEL potentiometer R811. The network R34 and R35 apply an adjustable bias to the reference terminal (3) of the 9685. This bias varies between ±0.5 V as the Trigger Level control is varied.

The input network, R29, 30 and 31 causes an attenuation of X4, thus the effective range of the Trigger Level control is ± 2.0 V. The input network also provides a 2 W, 50 Ohm input termination. An input signal of 10 V DC would cause just a 2 W dissipation and would apply a 2.5 V (nondamaging) signal to the 9685 comparator. Switch 805 determines trigger slope by controlling the output phase of "Exclusive OR" gate Z17.

The External Trigger position of S801 enables Z16 and also the trigger discriminator Z22 via Z5 and pin 4 of Z22.

The gates Z17 and Z27 are not enabled because the DC control voltage from S801-29 is HI. This allows only the comparator output from pin 7 to be active via Z17-2 and Z16-5. Z16-2 and Z16-14 form a "wired OR" function to drive the clock input of Z21-11.

This half of the 10H131 dual D flip-flop is connected as a Single Shot Multivibrator (SSMV). The timing of this SSMV is set by the R44, C10 network plus propagation time through Z17-12. Z21-15 is normally in the set (HI) state. When the positive transition of the clock signal arrives at pin 6, the Q output (pin 15) is triggered into the reset state.

A few nanoseconds later (determined by R44, C10 and the propagation delays), the set

input goes HI and the circuit returns to its original state. The SSMV output drives Z14 and Z15 which comprise a delay line of approximately 25 ns. In the double-pulse mode this serves to align the trigger pulse and the undelayed pulse. The lower half of Z21 is a divide-by-two circuit that divides the trigger rate in half and enables every other trigger to reach the trigger-out stages via Z27-12 during Square Wave mode. Z21-2 is active only in the Square Wave mode due to the logic input to its pin 12 from S803 via terminal 30. Z16-9 is disabled during Square Wave operation by the output from Z20-3.

The net result of enabling the various trigger sources and then combining them in OR gates such as Z16-9 is that the trigger to the delay or width circuits is selected from the appropriate source and is correctly aligned in time.

The Z33 gates select which of the several sources of drive signal is sent to the Pulse Out Equalizer. In Impulse mode, the signal at Z26-2 is a narrow signal (3 ns) from Z27-2 that normally serves as the trigger to the width circuits. Z26-14 passes either this signal or the 50% duty waveform from Z21-3 that is present in Square Wave mode. Since the width signal is present at Z33-4, the "wired OR" at Z33-2 and 3 represents the selection of either impulse, square wave or drive signals. A fourth signal, present at Z33-10 in the External Drive mode, completes the set of signals at Z33-14 in the various operating conditions.

The External Drive position of S801 enables Z27, which can then pass the trigger signal to Z33-10 and hence to the laser driver circuits. A logic signal from Z17-11 prevents the other gates feeding Z33 from bloching this action.

The Single Cycle pushbutton S804 is connected to a flip-flop, Z5-14 and Z15, which serves to prevent the multiple outputs due to switch-contact bounce.

The single/double pulse function is implemented by Z27, which allows only the trigger from the delay generator to pass via Z27-05 (in Single mode) or <u>both</u> this trigger and the undelayed trigger from Z15-14 to pass. Z26-12 is a control signal that allows either one or both width triggers to pass unless Impulse, Square Wave or External Drive is asserted. This control signal is obtained from the diode "OR", CR10 and 11, which in turn is driven by contacts on switches S801 and S803.

The two fast-pulse generator stages for Trigger Out and Pulse Out are identical and a description of the Trigger Out circuit suffices for both. Z27-9 and 15 are push-pull signals that drive a pair of switching transistors, Q3 and Q4 via T1. This transformer greatly reduces high speed common-mode components from the base drive signals. It is

constructed by wrapping several turns of twisted pair through the window of a small ferrite core in order to create a bifilar "transmission-line" type transformer.
The standing current is determined by R51 and is approximately 40 mA, Thus, a 2 V drive is applied to the bases of Q5 and Q6 which switch approximately 90 mA into the 50 Ohm output. This output is in parallel with R49 (200 Ohms) which produce pulses whose amplitude is at least 3 V. The outputs must be terminated in 50 Ohms or else the waveform will be distorted due to the saturation of the output transistor.

3.2.4 TIMING-DELAY-WIDTH CIRCUITS (Schematic 6030-32)

3.2.4.1 DELAY GENERATOR

There are two separate delay circuits used in the 6030 to cover the range from 5 ns to 10 ms. The short delays are generated by the lower pathway: Z7, Q14/15, Q17/18/19, Z13 and Z19. The remaining delay ranges are generated by the upper pathway: Z6, Q11/13, Q12/16 and Z12.

The short delay circuit receives a fixed width trigger from the input circuit via Z16-9, Dwg 6030-31. This trigger is 4 ns wide and during this time the switch pair, Q14/15, generates a fast negative pulse at the base of Q17. Operating as an emitter follower, Q17 discharges C26 in 1 ns. The emitter follower Q19, then applies this edge to the negative terminal of the high speed comparator, Z13, which then generates a fast positive edge at pin 7 when the waveform on pin 3 crosses the reference voltage on pin 2.

After the 4 ns trigger pulse has ended, C26 begins to recharge linearly due to the current from the collector of Q18. R809 (the front panel variable delay control) varies this current which in turn varies the slope of the positive-going ramp at the base of Q19. The emitter of Q19 then applies the positive ramp to the high speed comparator, Z13, which then generates a negative edge at pin 7 when the ramp recrosses the reference voltage on pin 2. Both the ramp slope and the reference voltage are varied by the networks R809, R102, R100 and R107. This is done to assure a smooth control response and to improve the adjustment range. The short delay circuit is enabled only in the 5-100 ns position of S802 via Z6-15.

The 1 us to 10 ms delays are generated by the emitter timed Single-Shot Multivibrator, Q12/16. The narrow input trigger is widened by another SSMV composed of Z6-14 (trigger inverter) and a pair of cross-coupled NOR gates. The positive pulse at Z6-7 toggles the pair which is then reset via the positive signal at Z6-5. This signal is generated by the

RC timing circuit, R86 and C22. By returning R86 to Z6-2, the timing waveform amplitude is doubled thus improving the stability of this SSMV.
The emitter-coupled switching pair, Q11/13, couples the widened trigger to the transistor SSMV. The completmentary pair, Q12/16, initially has both transistors in the "on" state. The trigger from Q13 turns Q16 off, which generates a positive step at its collector. This in turn allows the base of Q12 to rise to the level set by op amp Z11. Q12 is now off. R97 provides a current to charge one of the capacitors selected by S802. When the emitter voltage of Q12 reaches the voltage on its base, Q12 conducts and begins to turn Q16 on.

A short time later, CR13 conducts via the base of Q12 and the circuit regeneratively discharges the capacitor and returns to its original state. The pulse width is controlled by varying the voltage at the base of Q12. This voltage is , in effect a reference level that intercepts the ramp waveform on the emitter at the time the trailing edge occurs. Z11 translates the level and provides the proper scale factor for this "reference" level. Z11 obtains its input signal from the junction of R100 and R107. As R809 is rotated clockwise (maximum delay), the voltage at Z11-3 increases. This causes the duration of SSMV to increase which lengthens the delay interval.

The output from Q16 is translated to MECL levels by Z12 and is normally in a LO state. This permits emitter "OR-ing" with the signal from the short delay circuit, Z13-7. The SSMV is disabled when its triggers are blocked via Z6-11/15. This occurs when S802 is in the 5-100 ns position. Otherwise, the short delay generator is disabled.

A signal from whichever of the two delay generators is enabled appears at the "wired OR" point Z13-7 and Z19-9. It is a positive pulse whose trailing edge is shaped into a 4 ns wide trigger by a negative edge differentiator. This trigger appears at Z19-14 where it is sent to the width generator via gates Z26-27 (see Dwg 6030-31), or if IMPULSE has been selected, it is routed directly to the laser driver circuits. The signal from the "wired-OR" is also sent to Z10-11, a type D flip-flop, where it is used to detect the fact that the input trigger rate exceeds the rate at which the outputs are being generated. This condition is referred to as "overlap" and may occur in either the delay or width generator.

3.2.4.2 OVERLAP CIRCUIT

The trigger to the delay generator (Z6-10) is also sent to Z8-5 and Z8-12 where it is differentiated and appears at pin 9 as a narrow negative pulse (2 ns). At Z8-14 a

positive pulse is sent to the set input of the D flip-flop. This causes Z10-14 to go negative which would enable a negative signal on Z8-7 to pass through to pin 3.
The pulse from Z8-9, however, is too narrow and too early to be passed because it has terminated by the time the gate is opened by the D flip-flop. After approximately 10 ns, one of the delay generators has sent a positive transition to the clock terminal (Z10-11) and caused the D flip-flop to reset.

There will now be no further reset (clock) pulses until the delay generator has completed its cycle and been retriggered. If the next input trigger occurs before this time, the D flip-flop will be set, again opening the gate. The following trigger will now pass through the gate (Z8-3) and will trigger the slow SSMV, Z18-4. This then flashes the Overlap indicator.

3.2.4.3 SQUAREWAVE

The lower half of Z21 is a divide-by-two circuit that divides the trigger rate in half and enables every other trigger to reach the TRIG OUT generator stages via Z27-12 during the Square Wave mode. Z21-2 is active only in the Square Wave mode due to the logic input to its pin 12 from S803. Z16-9 is disabled during the Square Wave mode by Z20-3.

3.2.4.4 WIDTH GENERATOR

This circuit is not described in detail since the operation of the width generator is almost identical with that of the delay generator, except that the "width pulse" and "width trigger" serve the same function as the "delay pulse" and "delay trigger". A difference is that the width generator has no trailing edge discriminator, hence its output is a variable duration pulse. Also, Z24 adds a small amount of delay for alignment purposes.

3.2.5 LASER DRIVER CIRCUITS (Schematic 6030-34, 1&2)

The function of these circuits are to decode information from the various switches, provide proper routing for the drive and control signals and drive the laser. There are four modes: Pre-Bias, Zero Bias, CW and External Modulation. In addition, information is sent to this circuit when Impulse or Single Cycle is selected. The outputs are digital

control signals that enable or disable appropriate circuits; analog control signals that contain the peak, baseline and average information (which is used to control the amplitude of the laser output); and the drive signal that controls the timing of the laser turn-on and turn-off.
Also depicted on this schematic is a circuit which is located on the mother board and detects that the Mode switch has been moved. This circuit is shown in the upper left corner of the drawing. Normally the contact of S807 is in one of the four positions that connects the emitter of Q30 to one of the R1 pull-down resistors which saturates the transistor. When the switch contact is between positions, Q30 is no longer saturated and the collector goes positive. This signal is used to force the analog control loops to a known initial condition from which they smoothly regain control of the laser

3.2.5.1 DIGITAL CONTROL CIRCUITS

The digital control circuits will be described first. The purpose of these circuits is to convert the five inputs from the mode switch (Impulse, External Modulation, CW, Pre-Bias, and Zero Bias) into TTL logic levels that operate various solid-state switches which, in turn, control the analog and digital portions of the laser drive. When the arm of S807 is in a particular position, such as, EXT MOD, the voltage on that contact is held a junction below ground. Otherwise it is at -5.2 V. Quad line receiver Z4 is biased by its internal Vbb at -1.25 V. Its outputs are TTL levels.

Three of the inputs (Impulse, External Modulation and CW) are passed on (to sheet 2). These inputs, less 0 Bias, are combined via Z4 and Z5 to produce REP RATE ENABLE, TIMP,TPB and TCW. The prefix "T" denotes a TTL version of a control signal that might also have an ECL counterpart.

The analog switches such as Z12 are shown with a circle on their control input. They are in their low impedance state when this terminal is low. Table 1 shows the condition of the various solid state switches. The switch is identified by its control terminal (for example, Z14-9). This terminal is LO (near ground) when the switch is conducting (closed) "L" and "H" indicate LO and HI and "X" indicates "don't care."

In the Zero Bias mode there are no high inputs to Z4. Thus Z4-12 and 13 are both high, and

Z4-5 is low. Z12-9 is low which connects the Peak amplitude control, R812, to Z11-3 via R5. The other modes may be analyzed similarly by use of Table 1.

Mode							Destination IC's	Name or Designation
IC No	OB	PB	CW	EM	I	$\overline{I}$		
Z4-2	X	X	X	X	L	H	Z3-13(sheet 2)	$\overline{IMPULSE}$
Z4-4	X	X	X	X	H	L		TI
Z4-5	L	H	L	L	X	X		T PRE-BIAS
Z4-7	L	H	L	L	X	X		PRE-BIAS
Z4-10	L	L	L	H	X	X	Z3-5 (sheet 2)	EXT MOD
Z4-12	H	H	H	L	X	X		T EM
Z4-13	H	H	L	H	X	X	Z14-16	TCW
Z5-1	X	X	X	X	H	L		TI
Z5-2,11	H	H	L	L	X	X	Z12-9, Z14-8,9	T $\overline{CW + EM}$ T(PB+OB)
Z5-3,4	$\overline{I}$	$\overline{I}$	H	H	PB+OB	H	Z9-1,8, Z10-3 (sheet 2)	T $\overline{IMP}$=T$\overline{I}$ +CW +EM
Z5-6	H	I	H	H	H	$\overline{PB}$	Z12-8, 16 Z14-1	T $\overline{PB}$ =I + $\overline{PB}$
Z5-8	L	L	H	H	X	X	Z12-1, Rep Rate Enable	T (CW + EM)
Z5-9	H	H	L	H	X	X	Z14-16	T$\overline{CW}$
Z5-10	H	H	H	L	X	X		T $\overline{EM}$

Table 1.

Mode Abbreviations:

PB = PRE-BIAS	EM = EXT MOD	* = AND
OB = ZERO BIAS	I = IMPULSE	- = NOT
CW = CW (Continuous)	+ = OR	T = TTL logic levels

3.2.5.2 LASER MODULE

The Laser Module is shown in the center of Drawing 6030-34, sheet 2. It is enclosed by dashed lines within which are six components. The laser itself is the left hand diode whose anode is grounded to the case at pins 13 and 15. The case is connected to ground

via pins 1 and 2. A 170 uH choke is provided internally for applying DC bias to the laser. This is done in all modes except Zero Bias. The diode shown between pins 7 and 8 is a built in monitor (detector) that is used for controlling the laser's output in the CW and Impulse modes and is also used to detect excessive optical power. An internal 22 Ohm resistor provides wideband termination for the high speed signals from Q6.
A thermoelectric cooler (TEC) is incorporated in the module and is shown connected between pins 3, 4 and 5, 6. Its associated temperature sensor is connected between 11 and 12. The temperature is maintained at approximately 10° C by means of a feedback loop consisting of Z1 and Q10. This loop supplies enough cooling current to bring the sensor voltage to 2.9 V (Z1-3). R104 limits the maximum current during start up to a safe level (approximately 2 A).

3.2.5.3 CW (Continuous Wave)

CW operation utilizes the DC current source, Q1 and Z7. The voltage from Z8-1 (labeled CW or Baseline Level) is applied to one arm of the resistor bridge, R56, R57, R65 and R66. This same voltage is forced to appear across R82 and R83. A typical calibration is for R82 and R83 to be 50 Ohms so that 20 mA/Volt is produced by Q1. This current flows (via R81), L, and the internal 170 uH inductor) through the laser to ground. Once the threshold current of the laser is exceeded, the relationship between the current in the laser and its optical output is linear.

The path of the "CW or Baseline" signal may be followed on drawing 6030-34, sheet 1. First, we determine the status of the switches that affect the "CW or Baseline" signal. Z9-3, for example, is connected to three such switches. From Table 1 it is seen that its control signal is T $\overline{\text{IMP}}$ from Z5-3, 4 and that it is high in the CW mode. Thus, Z9-3 is not conducting. Z14-16 is similarly found to be low so this switch is conducting. Also, Z14-1 is high which renders this switch open. So far the path is into Z16-3, out of Z16-1 and through Z14-15, 14. Since Z14-9 is also low, the "EXT MOD or CW feedback" signal from Z16-7 is also applied to Z16-2. The output from Z16-7 is also applied to Z16-2. The output from Z13-1 could be influenced by any signal from R22 except that Z14-6 shorts it to ground. Similarly, the junction of R2 and R8 is not affected since Z9-8 is high.

In summary, the voltage from the PEAK Potentiometer, R812, is inverted about ground by Z13-1 and also undergoes a gain reduction of 6. (-6 Volts on the arm of R812 becomes +1 volt at Z13-1). The current from the monitor diode is converted at Z16-7 to approximately 1 volt for a 1 mW optical output and is applied to Z16-2 where it will almost

cancel the signal from R812. If this does not happen, a large error signal appears at Z16-1 where it passes via Z14-14 and Z8-1 to the current generator (Z7 and Q1 sheet 2).

The display receives its sample of the voltage on R818 (PEAK Control Pot) via "precision rectifier" Z11-5,7, R3, R13, and S809. Since Z12-9 is low, and Z12-16 is high, pressing "READ" (S809) will not result in a change of display reading. (One precision rectifier or the other will supply the voltage for the display. (The use of precision rectifiers is to block "negative light" readings on the display.)

3.2.5.4 BASELINE

We have traced in detail the manner in which a voltage on the arm of the PEAK potentiometer causes a predictable current to be applied to the laser.

Similar considerations will show how the Average Light Level for the EXT MOD mode is derived . The PEAK control pot is still used to set the desired optical level (around which the modulation will occur). Feedback via Z16-7 is used as with CW. Z9-1 is high (as for CW) but Z14-16 is now also high. This has the effect of routing the error signal (Z16-1) through Z8-7 (another precision rectifier).

It is then applied (sheet 2) as the "EXT or pulse amplitude" signal to Z1-5. (A X2 attenuator followed by an adjustable X2 gain stage). The laser's DC bias is now provided by Q9 (via Q6). R108 samples the current which is compared to the voltage from Z1-7 by a bridge arrangement (R72, R73, R74, R95). Z2-7 generates the error signal applied to Q8 and thence to Q9.

The actual modulation is applied from J2 via FET current amplifier, Q11, to Q8 where it generates a base voltage for Q9 which (via R112) generates a predictable signal current through R108 and Q6 that finally drives the laser. Although this circuit appears to be direct coupled from J2, it acts as if it were AC coupled due to the action of Z2 which monitors the total laser current (flowing through R108). The low frequency cut-off is approximately 100 Hz.

3.2.5.5 PRE-BIAS AND ZERO BIAS MODES

Zero Bias is a mode in which there is no optical output between pulses. That is, during a logical "zero" there is zero light ouput. The upper level is set by the PEAK control which,

in turn, determines the amount of current switched into the laser. In the Pre-Bias mode, both the upper ("one") and lower ("zero") logic levels are adjustable by means of the Peak and Baseline controls. In PreBias, the lower level of Peak and Baseline is set to 50 uW to allow the utilization of that portion of the laser power/current transfer curve which is the most linear.

3.2.5.5.1 PRE-BIAS

The Pre-Bias system consists of: 1) producing a current that determines the optical power radiated between pulses. (this is the "Baseline") and 2) calculating the difference between the desired Peak power and the Baseline power, and then generating a pulse of corresponding amplitude. This pulse is then added to the already present Baseline level to produce the desired Peak level. The Baseline current is generated and applied to the laser in the same manner as for CW operation, except that optical feedback is not used.

The path from the BASE LINE control potentiometers R813 is through Z13-7, Z14-3 (conducting), past Z14-14 and Z9-3 (open), to Z8-1 (unity gain) and finally to Z7. As stated above, Z7 and Q1 form a current source, and this is what supplies the Pre-Bias current to the Laser.

The path from the PEAK control potentiometer R812 is through Z13-1, Z16-1, past Z14-15 (open), to Z8-7 (through CR7), Z1-7, and finally to Z2-7 . As stated above Z2 -7, Q8, and Q9 form a current source which also drives the laser. The difference for the pulsed modes of operation verses EXT MOD is: 1) that the current is switched by Q6 & Q7 as defined by the level of the "NOT" DRIVE signal at J1 and 2) there is no optical feedback.

The pulse current(through Q6 and Q7) is determined for PEAK by the precision rectifier formed by Z8 and CR7 and the two resistor dividers R31-R40 and R32-R39. This circuit produces a voltage which is the difference between the voltages at Z16-1 (the scaled version of the PEAK potentiometer voltage) and Z8-1(the scaled version of the BASE LINE potentiometer voltage), yet not less than zero. The output, at the cathode of CR7, is applied to Z1-5 (sheet 2) which provides an adjustable gain of X1 $\pm$0.5. At this point, a 3 volt difference from the control potentiometers has become 500 mV at Z1-7. Z2-7 and R108 (47 Ohm) convert this to approximately 10 mA, which is the value needed for a 0.50 mW optical power change. Thus a 3 volt difference between the Peak and Baseline control voltages is converted to a 0.50 mW optical step. Since this step is added to the Baseline level already present (via Z7, Q1) the Peak and Baseline levels are determined by their respective potentiometers, provided that the "gains" (voltage to current conversion factors) of the two channels are set to be equal.

The timing signal enters on J1 and is labeled "NOT" DRIVE. This digital signal is then applied (from Z3-6) to the base of pre-driver Q4. Q4 and Q5 are a switching pair whose current is controlled by Z2-1 and Q3. The pre-drive current through Q4,5 increases with increasing optical output so that the main drivers Q6 and Q7 receive larger switching voltages as their current increases. This is achieved by utilizing a current source, comprised of Z2-1 and Q3, which tracks the level control voltage at Z1-7. A small offset is introduced into this current source so that at very small pulse levels there is sufficient pre-drive current to switch Q6 and 7.

The minimum Peak/Baseline level is set to 50 uW via R22 which provides a common D.C. offset to Z13-3 and -5 and causes their outputs to be greater than 0 Volts when the Peak or Baseline potentiometers are set to minimum.

The voltages on the control potentiometers (R812 and R813, sheet 1) are also processed by Z11, Z12 , R3-6, R13-16, CR1 and 4 and sent to the Display. Switches Z12-8, 16 are closed by the $\overline{\text{TPB}}$ signal, Z12-1 by TCW+EM, while switch Z12-9 is open. R13, R14, R15, and R16 provide the same X6 attenuation as is applied to the control signals so that the display reads the same voltages as Z13-7 and Z13-1.

Z11 forms a precision rectifier that displays the value of the Peak or Baseline, whichever is of greater magnitude. Thus for the cases when the baseline has been set above the peak the Peak reading will not give a miscelaneous reading. When the READ switch, S809, is asserted the display will read that value associated with the setting of Baseline regardless of the Peak setting. To set the display reading to 50 uW when the levels are adjusted to minimum, R3,4 , Z12-2, R5,5 and Z12-6 provide a small offset for the Peak and Baseline display voltages, respectively.

The net result of the above (for the correct adjustments) is that the baseline is adjustable from 50 uW to 1.0 mW, and the pulse peak is adjustable from the baseline level to 1.0 mW.

3.2.5.5.2 ZERO BIAS

In the Zero Bias mode, only the switching transistors Q6 and Q7 (sheet 2) supply current to the laser. The DC control voltage is obtained from the Peak control potentiometers (R812 , sheet 1) and is processed directly through Z13-1, Z16-1, and Z8-7. Switches Z9-1, Z9-8, Z14-8, Z14-9 and Z14-16 are open Thus Z13-1 is a X6 attenuator while Z16-1 is a X1

voltage follower. Since the switch Z14-1 is open (TPB is HI), the voltage at the Baseline potentiometer is not presented to Z8-3, which will now be held at ground by R24. This allows Z8-7 (through CR7) to be a X1 follower of the voltage at Z16-1.

This has two implications: 1) the CW or BASELINE current source is turned off, which prevents any ambient light and 2) the Peak control potentiometer R812 adjusts the pulsed current to values that produce a power level between 50 uW and 1.0 mW (the same range that the CW or BASELINE current source uses during PRE-BIAS, as determined by the BASELINE potentiometer, R813).

The voltages on the Peak control potentiometer R812 is also processed by Z11, Z12 , R3-6, R13-16, CR1 and 4 and sent to the Display. Switches Z12-8, 16 are opened by the TPB signal, Z12-1 by TCW+EM, while switch Z12-9 is open. R13, R14, R15, and R16 provide the same X6 attenuation as is applied to the control signals so that the display reads the same voltage as Z13-1. To set the display reading to 50 uW when the level is adjusted to minimum, R3,4 , Z12-2 provide a small offset for the Peak display voltage. In this Mode, Z12-16 and Z12-8 are open (TPB is HI), which forces Z11-3 to ground via R15 and R16. This causes the output of the precision rectifier Z11 to be solely controlled by the voltage on Peak potentiometer R812. Also, when READ switch S809 is asserted, then the display reads 0.00 mW, as it should.

3.2.5.6 IMPULSE

Impulse mode is used to generate a narrow, fixed width and fixed amplitude pulse. The digital timing is obtained from the $\overline{\text{DRIVE}}$ J1 (sheet 2). The leading edge of the Impulse signal Z3-6 is caused by $\overline{\text{DRIVE}}$ itself. R55 and Z3-14 provide a short time delay of less than 2 ns that produces the trailing edge. The result is a short, positive pulse delivered to the base of Q4.

The Pre-drivers (Q4-Q5) and the main drivers (Q6 and Q7) have both been programmed for a high (120% of F.S.) current that represents the amplitude of the Impulse waveform (Z9-8, sheet 1 is closed). In order to assure fast response, the laser is biased to just above its threshold current by an auxiliary feedback loop that holds the laser at this point regardless of duty factor variations. The optical output is monitored by internal detector diode DS1-7, and in Impulse mode represents the average optical power.

Both the baseline level and the average power of the impulses themselves contribute to this signal. The latter contribution varies with rep-rate (Duty Factor). Since it is desired to stabilize the baseline level only, a signal proportional to the Duty Factor is required. This signal is obtained from Z3-6 (via R64). Both signals are sent to the auxiliary feedback loop. On sheet 1, the Imp Compensation and Imp Feedback signals are combined in Z6 along with a DC level from R37 and (via Z9-2 and Z8-1) are sent back to the Baseline current source (Q1 sheet 2). R37 adjusts the small (approximately 10 uW) amount of residual light that is emitted between impulses. R42 adjusts the balance between the optical sample and the digital (DF) sample so that there is no change with varying rep-rates.

3.2.5.7 LASER GUARD

The laser is protected from excessive drive currents by a group of circuits referred to as LASER GUARD. These circuits ensure that whenever an unusual situation occurs the laser is promptly shunted by a low impedance. This action is called "crowbar." The path around the laser is from DS1-10 through L1, Q2, and R79 to ground. Even if both sets of driver transistors (Q6, Q9 and Q1) were to short circuit, the resulting current would be shunted around the laser by Q2.

If there is excessive current (20 mA or more) flowing in the crowbar transistor, Q2, it is sensed by Z7. This causes a positive voltage (via CR14) to reinforce the triggering of Z10. The circuit remains in the crowbar state until the over current condition is removed. Although the control circuits generally turn on "gracefully" without excessive current transients, a time constant is provided (C59, R101) that turns Q2 on when the power is initially applied.

When a change of mode is made, signals from P2-27 and Z5-3 trigger the crowbar action. In the upper right hand corner of sheet 2, the mode change and T $\overline{\text{IMPULSE}}$ signals may be found. These are applied to a timer circuit, Z10, that acts to turn on the crowbar transistor Q2 via Q12. It also is triggered at Initial Power-on by CR-23 and R130. A $\overline{\text{CROWBAR}}$ signal is sent to Z17-2 (sheet 1). This is another timer that acts to further hold off the control circuitry and permit a smooth return to normal.

While Z17 is in its timing cycle, the LASER ACTIVE indicator is extinguished and a positive level from Z17-3 via Z15-2 turns on the LASER GUARD indicator. After several seconds the

Z10 timer will recover (if no over current condition is present) and allow the control circuits to recover. Another input to Z10-4 is from the internal monitor diode DS1-7. This produces a voltage across R102 and R103 that is set to trigger Z10 when the optical output becomes too high.

3.2.6 DISPLAY CIRCUIT (Schematic 6030-35)

IC Z1 and associated circuitry comprise a single-chip digital voltmeter that drives three seven-segment LED displays to provide a readout of the optical power levels with .01 mW resolution. R6 and R7 form an input attenuator to assure that the maximum input to the voltmeter will not exceed its full-scale limit of 200 mV. The Calibration adjustment R3, then is set so that an input voltage corresponding to an optical power of 2 mW produces a reading of 2.00 on the display. The decimal point is positioned in the most significant decade by R9. The logic input from S803 is at 5.2 V during Impulse mode and, via CR2, turns Q1 on. This pulls pin 37 high which forces the display to read all "8"s. This is the normal indication for Impulse mode and is a reminder that in this mode the amplitude is not adjustable with the front panel controls.

3.2.7 POWER SUPPLY (Schematic 6030-37)

Six IC regulators are used to provide the voltages used in the 6030. The largest current demand is from the -5.2 V supply, therefore, three regulators are used for this voltage. The regulators are all rated for 1.5 A output and have a built-in current limit and thermal protection. Additionally, there are two protection diodes (such as CR1 and CR2) whose purpose is to protect the regulators when abnormal conditions occur. If the power switch were turned on and off rapidly, for instance, it is possible that the regulator could become reverse biased since C7 may not have discharged fully.

The output voltages are set during final calibration by their associated 20-turn potentiometers and normally need no further adjustment. Two bridge rectifiers, CR701 and CR702, plus filters, C1, C2, C3 and C4, provide unregulated voltages to operate the regulators. The power transformer, T701, has a split primary and, by means of a series-parallel switching arrangement, can accommodate both 110 and 220 VAC inputs. The primaries are paralleled with a pair of MOV surge protection devices to aid in absorbing line transients.

3.3 INTERNAL CONTROLS

PC BOARD	SCHEMATIC	CONTROL	ADJUSTMENT
Time -Freq. #6020-1	6030-30	R1	105 MHz high limit
		R2	7 MHz low limit
Display #6020-2	6030-35	R3	Digital display calibration: Display 1.00 with PEAK control at max.
Power Supply #6020-3	6030-37	R3	+12 VDC ± 10 mV
		R6	-12 VDC ±10 mV
		R9	+ 6 VDC ±10 mV
		R12	-5.2 VDC ±10 mV TPA
		R15	-5.2 VDC ±10 mV TPB
		R18	-5.2 VDC ±10 mV TPC
Laser Driver #6030-1	6030-34 sheet 1	R19	PEAK and BASELINE control: Equalize PEAK & BASELINE amplifiers
		R22	Minimum PULSE power: Adjust to 50 uW. Interacts with R83
		R37	IMPULSE width calibration: Adjust for 400 ps at 100 MHz
		R42	IMPULSE frequency compensation: Adjust for 400 ps at 100 MHz
		R10	C.W. calibration: Adjust for 1 mW full scale
	6030-34 sheet 2	R83	BASELINE calibration: Interacts with R22
		R58	PEAK calibration for PULSE modes: Adjust for 1 mW at full scale
		R103	Over-light Threshold: Adjust to fire LASER GUARD at 1.2 mW

SECTION 4

MAINTENANCE

4.1 FAN FILTER

The fan filter should be cleaned with warm water whenever it is dusty. This will allow for proper cooling of the laser and other components and extend their lifetimes. The filter housing snaps off. An internal, self-resetting thermal switch will disconnect the line power if internal temperature rises above specified limits.

4.2 LIGHT OUTPUT CONNECTOR

For satisfactory performance, proper care in the use of the optical components is necessary. There must be no contamination to interfere with the passage of light through the fiber end connections and the fluid inside the bulkhead connector must not be wasted. The following procedures should be observed.

1. Avoid connecting and disconnecting the optical cable as much as possible.

2. Keep the connectors absolutely clean.

3. Keep the output connector and the user's connector capped when not coupled.

SECTION 5

- PARTS LIST AND SCHEMATICS -

ABBREVIATIONS

CER	CERAMIC	PF	PICOFARAD
COMP	COMPOSITION	SIP	SINGLE INLINE PACKAGE
DIP	DUAL INLINE PACKAGE	TAN	TANTALUM
ELEC	ELECTROLYTIC	UH	MICROHENRY
FAC SEL	VALUE SET AT FACTORY	UF	MICROFARAD
K	KILOHM	V	WORKING VOLTS
M	MEGOHM	VAR	VARIABLE
MF	METAL FILM	W	WATTS
MIC	MICA	WW	WIREWOUND
MONO	MONOLYTHIC CERAMIC		

----------NOTE----------

The number in the second column is the BERKELEY NUCLEONICS re-order number

---

MOTHER BOARD 6020-1 649-131

C1	112-002	33PF 5% 500V MIC
C2	110-019	0.05UF 20% 25V CER
C3	110-019	0.05UV 20% 25V CER
C4	110-019	0.05UF 20% 25V CER
C5	110-019	0.05UV 20% 25V CER
C6	110-019	0.05UF 20% 25V CER
C7	110-019	0.05UF 20% 25V CER
C8	110-019	0.05UF 20% 25V CER
C9	110-019	0.05UF 20% 25V CER
C10	110-021	5PF 5% 500V FAC SEL
C11		NOT USED
C12	112-004	100PF 5% 500V MIC
C13	110-019	0.05UF 20% 25V CER
C14	110-019	0.05UF 20% 25V CER
C15	110-019	0.05UF 20% 25V CER
C16	110-019	0.05UF 20% 25V CER
C17	110-019	0.05UF 20% 25V CER
C18	110-019	0.05UF 20% 25V CER
C19	110-019	0.05UF 20% 25V CER
C20	110-019	0.05UF 20% 25V CER
C21	110-019	0.05UF 20% 25V CER
C22	112-001	22PF 5% 500V MIC
C23	112-004	100PF 5% 500V MIC
C24	122-016	10UF 10% 15V TAN
C25	122-002	1UF 10% 35V TAN
C26	112-019	15PF 5% 500V MIC
C27	112-021	5PF 5% 500V MIC
C28	112-001	22PF 5% 500V MIC
C29	112-004	100PF 5% 500V MIC
C30	122-016	10UF 10% 15V TAN
C31	122-016	10UF 10% 15V TAN
C32	112-019	15PF 5% 500V MIC
C33	122-002	1UF 10% 35V TAN
C34	122-015	33UF 10% 25V TAN
C35	110-019	0.05UF 20% 25V CER
C36	110-019	0.05UF 20% 25V CER
C37	110-019	0.05UF 20% 25V CER
C38	122-015	33UF 10% 25V TAN
C39	110-019	0.05UF 20% 25V CER
C40	110-019	0.05UF 20% 25V CER
C41	122-015	33UF 10% 25V TAN
C42	110-019	0.05UF 20% 25V CER
C43	110-019	0.05UF 20% 25V CER
C44	110-019	0.05UF 20% 25V CER
C45	110-019	0.05UF 20% 25V CER
C46	110-019	0.05UF 20% 25V CER

C47		NOT USED
C48	110-019	0.05UF 20% 25V CER
C49	110-019	0.05UF 20% 25V CER
C50	110-019	0.05UF 20% 25V CER
C51	110-019	0.05UF 20% 25V CER
C52	110-019	0.05UF 20% 25V CER
C53	110-015	0.05UF 20% 25V CER
C54	110-019	0.05UF 20% 25V CER
C55	110-019	0.05UF 20% 25V CER
C56	110-019	0.05UF 20% 25V CER
C57	110-019	0.05UF 20% 25V CER
C58	122-015	33UF 10% 25V TAN
C59	122-015	33UF 10% 25V TAN
C60	122-015	33UF 10% 25V TAN
C61		NOT USED
C62	112-002	33PF 5% 500V MIC
C63		NOT USED
C64		NOT USED
C65		NOT USED
C66	122-015	33UF 10% 25V TAN
C67	122-015	33UF 10% 25V TAN
C68	122-015	33UF 10% 25V TAN
C69	122-015	33UF 10% 25V TAN
C70	122-015	33UF 10% 25V TAN
C71	122-015	33UF 10% 25V TAN
C72	122-015	33UF 10% 25V TAN
C73	122-015	33UF 10% 25V TAN
C74		NOT USED
C75	122-015	33UF 10% 25V TAN
C76	122-015	33UF 10% 25V TAN
C77	122-014	33UF 10% 6V TAN
C78	122-014	33UF 10% 6V TAN
C79	110-019	0.05UF 20% 25V CER
C80	110-019	0.05UF 20% 25V CER
C81	112-001	22PF 5% 500V MIC
C82	112-001	22PF 5% 500V MIC
C83	112-013	470PF 5% 500V MIC
C84	112-013	470PF 5% 500V MIC
C85	122-009	0.68UF 10% 500V TAN

CR1	411-004	1N4152
CR2	411-004	1N4152
CR3	411-004	1N4152
CR4	412-006	1N5221 20% 2.4V
CR5	411-004	1N4152
CR6	411-004	1N4152
CR7	411-004	1N4152
CR8	411-004	1N4152
CR9	411-004	1N4152
CR10	411-004	1N4152
CR11	411-004	1N4152
CR12	411-002	1N270
CR13	411-004	1N4152
CR14	411-004	1N4152
CR15	412-016	1N5221 20% 2.4V
CR16	411-002	1N270
CR17	411-004	1N4152
CR18	411-004	1N4152
CR19	412-016	1N5221 20% 2.4V
CR20	411-004	1N4152
CR21	411-004	1N4152
CR22	411-004	1N4152
CR23	411-004	1N4152
CR24	411-002	1N270
CR25	411-004	1N4152
CR26	411-004	1N4152
CR27	411-004	1N4152
CR28	411-004	1N4152
CR29	411-002	1N270
CR30	411-004	1N4152
CR31	411-004	1N4152
CR32	411-004	1N4152
CR43	411-004	1N4152

L1	311-005	0.33UH
L2	311-005	0.33UH

Q1	430-026	MPS3640
Q2		NOT USED
Q3	430-025	2N5179
Q4	430-025	2N5179
Q5	430-049	2N5583
Q6	430-049	2N5583
Q7	430-025	2N5179
Q8	430-025	2N5179
Q9	430-049	2N5583
Q10	430-049	2N5583
Q11	430-027	MPS3646
Q12	430-026	MPS3640
Q13	430-027	MPS3646

Q14	430-025	2N5179
Q15	430-025	2N5179
Q16	430-027	MPS3646
Q17	430-026	MPS3640
Q18	430-026	MPS3640
Q19	430-025	2N5179
Q20	430-027	MPS3646
Q21	430-026	MPS3640
Q22	430-027	MPS3646
Q23	430-025	2N5179
Q24	430-025	2N5179
Q25	430-027	MPS3646
Q26	430-026	MPS3640
Q27	430-026	MPS3640
Q28	430-025	2N5179
Q29	430-026	MPS3646
Q30	430-027	MPS3646
Q31	430-017	MPS6531

R1	244-018	50VAR
R2	244-037	10K VAR
R3		NOT USED
R4		NOT USED
R5	213-131	130 5% 1/4W COMP
R6	213-820	82 5% 1/4W COMP
R7	213-102	1K 5% 1/4W COMP
R8	213-470	47 5% 1/4 W COMP
R9	213-391	390 5% 1/4W COMP
R10	213-820	82 5% 1/4W COMP
R11	213-131	130 5% 1/4W COMP
R12	213-391	390 5% 1/4W COMP
R13	213-102	1K 5% 1/4W COMP
R14	213-391	390 5% 1/4W COMP
R15	213-390	39 5% 1/4W COMP
R16	213-151	150 5% 1/4W COMP
R17	213-471	470 5% 1/4W COMP
R18	213-512	5.1K 5% 1/4W COMP
R19	213-471	470 5% 1/4W COMP
R20	213-471	470 5% 1/4W COMP
R21	213-101	100 5% 1/4W COMP
R22	213-102	1K 5% 1/4W COMP
R23	213-103	10K 5% 1/4W COMP
R24	213-103	10K 5% 1/4W COMP
R25	223-014	220/330 6 PAIR NETWORK
R26	213-103	10K 5% 1/4W COMP
R27	223-014	220/330 6 PAIR NETWORK
R28	213-511	510 5% 1/4W COMP
R29	213-391	390 5% 1/4W COMP
R30	210-560	56 5% 2W COMP
R31	213-910	91 5% 1/4W COMP
R32	213-153	15K 5% 1/4W COMP
R33	213-102	1K 5% 1/4W COMP
R34	213-122	1.2K 5% 1/4W COMP
R35	213-121	120 5% 1/4W COMP
R36	213-362	3.6K 5% 1/4W COMP
R37	213-102	1K 5% 1/4W COMP
R38	213-821	820 5% 1/4W COMP
R39	223-014	220/330 6 PAIR NETWORK
R40	213-391	390 5% 1/4 W COMP
R41	213-391	390 5% 1/4W COMP
R42	213-510	51 5% 1/4W COMP
43	213-510	51 5% 1/4W COMP
R44	213-201	200 5% 1/4W COMP
R45	213-391	390 5% 1/4W COMP
R46	213-391	390 5% 1/4W COMP
R47	211-680	68 5% 1W COMP
R48	213-391	390 5% 1/4W COMP
R49	213-201	200 5% 1/4W COMP
R50	213-100	10 5% 1/4W COMP
R51	213-101	100 5% 1/4W COMP
R52	213-391	390 5% 1/4W COMP
R53	213-511	510 5% 1/4W COMP
R54	213-101	100 5% 1/4W COMP
R55	223-007	390 5 RESISTOR NETWORK
R56	213-101	100 5% 1/4W COMP
R57	213-101	100 5% 1/4W COMP
R58	213-101	100 5% 1/4W COMP
R59	213-101	100 5% 1/4W COMP
R60	223-007	390 5 RESISTOR NETWORK
R61	213-101	100 5% 1/4W COMP
R62	213-101	100 5% 1/4W COMP
R63	223-014	220/330 6 PAIR NETWORK
R64	213-511	510 5% 1/4W COMP
R65	213-511	510 5% 1/4W COMP
R66	223-014	220/330 6 PAIR NETWORK
R67	213-102	1K 5% 1/4W COMP
R68	213-391	390 1/4W COMP
R69	213-391	390 1/4W COMP
R70	213-510	51 5% 1/4W COMP
R71	213-510	51 5% 1/4W COMP
R72		NOT USED
R73		NOT USED

R74	213-101	100 5% 1/4W COMP
R75		NOT USED
R76	211-680	68 5% 1/4W COMP
R77		NOT USED
R78	213-100	10 5% 1/4W COMP
R79	213-201	200 5% 1/4W COMP
R80	213-220	22 5% 1/4W COMP
R81	213-511	510 5% 1/4W COMP
R82	223-471	470 5% 1/4W COMP
R83	223-007	390 5 RESISTOR NETWORK
R84	223-014	220/330 6 PAIR NETWORK
R85	213-241	240 5% 1/4W COMP
R86	213-271	270 5% 1/4W COMP
R87	213-101	100 5% 1/4W COMP
R88	213-151	150 5% 1/4W COMP
R89	213-273	27K 5% 1/4W COMP
R90	222-046	5.9K 1% 1/4W MF
R91	222-030	1.4K 1% 1/4W MF
R92	222-021	3.57K 1% 14W MF
R93	222-016	909 1% 1/4W MF
R94	213-222	2.2K 5% 1/4W COMP
R95	213-331	330 5% 1/4W COMP
R96	223-007	390 5 RESISTOR NETWORK
R97	213-222	2.2K 5% 1/4W COMP
R98	223-014	220/330 6 PAIR NETWORK
R99	213-103	10K 5% 1/4W COMP
R100	222-051	10K 1% 1/4W MF
R101	213-391	390 5% 1/4W COMP
R102	213-132	1.3K 5% 1/4W COMP
R103	213-391	390 5% 1/4W COMP
R104	213-820	82 5% 1/4W COMP
R105	213-820	82 5% 1/4W COMP
R106	213-272	2.7K 5% 1/4W COMP
R107	222-042	2K 1% 1/4W MF
R108	213-511	510 5% 1/4W COMP
R109	213-471	470 5% 1/4W COMP
R110	213-101	100 5% 1/4W COMP
R111	223-014	220/330 6 PAIR NETWORK
R112	213-222	2.2K 5% 1/4W COMP
R113	223-007	390 5 RESISTOR NETWORK
R114	213-241	240 5% 1/4W COMP
R115	213-271	270 5% 1/4W COMP
R116	244-010	500 VAR
R117	223-014	220/330 6 PAIR NETWORK
R118	223-014	220/330 6 PAIR NETWORK
R119	213-102	1K 5% 1/4W COMP
R120	213-273	27K 5% 1/4W COMP
R121	222-046	5.9K 1% 1/4W MF
R122	222-030	1.4K 1% 1/4W MF
R123	222-021	3.57K 1% 1/4W MF
R124	222-016	909 1% 1/4W MF
R125	213-222	2.2K 5% 1/4W COMP
R126	213-331	330 5% 1/4W COMP
R127	213-220	22 5% 1/4W COMP
R128	223-014	220/330 6 PAIR NETWORK
R129	213-102	1K 5% 1/4W COMP
R130	213-103	10K 5% 1/4W COMP
R131	222-051	10K 1% 1/4W MF
R132	213-201	200 5% 1/4W COMP
R133	213-911	910 5% 1/4W COMP
R134	213-391	390 5% 1/4W COMP
R135	213-820	82 5% 1/4W COMP
R136	213-820	82 5% 1/4W COMP
R137	213-272	2.7K 5% 1/4W COMP
R138	222-042	2K 1% 1/4W MF
R139	213-101	100 5% 1/4W COMP
R140	213-222	2.2K 5% 1/4W COMP
R141	223-007	390 5 RESISTOR NETWORK
R142	213-221	220 5% 1/4W COMP
R143	223-007	390 5 RESISTOR NETWORK
R144	223-007	390 5 RESISTOR NETWORK
R145	213-820	82 5% 1/4W COMP
R146	213-131	130 5% 1/4W COMP
R147	213-101	100 5% 1/4W COMP
R148	213-101	100 5% 1/4W COMP
R149	213-102	1K 5% 1/4W COMP
R150	213-151	150 5% 1/4W COMP
R151	213-151	150 5% 1/4W COMP
R152	213-222	2.2K 5% 1/4W COMP
R153	213-102	1K 5% 1/4W COMP
R154	213-271	270 5% 1/4W COMP
R155	213-223	22K 5% 1/4W COMP
R156	213-102	1K 5% 1/4W COMP
R157	213-102	1K 5% 1/4W COMP
R158	213-102	1K 5% 1/4W COMP
R159	213-471	470 5% 1/4W COMP
R160		NOT USED
R161		NOT USED
R162	213-102	1K 5% 1/4W COMP
R163	213-331	330 5% 1/4W COMP
R164	213-221	220 5% 1/4W COMP
R165		NOT USED

R166	213-131	130 5% 1/4W COMP
R167	213-241	240 5% 1/4W COMP
R168	213-241	240 5% 1/4W COMP
R169	213-241	240 5% 1/4W COMP
R170		NOT USED
R171	213-225	2.2M 5% 1/4W COMP
R172	213-103	10K 5% 1/4W COMP
R173	213-562	5.6K 5% 1/4W COMP
R174	213-431	430 5% 1/4W COMP
R175	213-222	2.2K 5% /4W COMP
R176	213-151	150 5% 1/4W COMP

T1-T18	318-003	CORE, FERRITE

Z1	440-133	74LS490
Z2	440-133	74LS490
Z3	440-078	10212
Z4	440-077	10138
Z5	440-045	10102
Z6	440-045	10102
Z7	440-134	10H102
Z8	440-134	10H102
Z9	440-134	10H102
Z10	440-136	10H131
Z11	440-116	LF356
Z12	440-070	10124
Z13	NOT USED	
Z14	440-045	10102
Z15	440-045	10102
Z16	440-134	10H102
Z17	440-135	10H107
Z18	440-134	10H102
Z19	440-045	10102
Z20	440-045	10102
Z21	440-136	10H131
Z22	440-149	SP9685
Z23	440-045	10102
Z24	440-045	10102
Z25	440-134	10H102
Z26	440-134	10H102
Z27	440-134	10H102
Z28	440-045	10102
Z29	440-045	10102
Z30	440-116	LF356
Z31	NOT USED	
Z32	440-134	10H102
Z33	440-134	10H102
Z34	440-130	LF353
Z35	440-130	LF353

	664-020	ADAPTER

PWR SUPPLY BD, 6020-3 649-094

C1	120-022	45000F +75-10% 25V ELEC
C2	120-022	45000F +75-10% 25V ELEC
C3	120-023	75000F +75-10% 15V ELEC
C4	120-023	75000F +75-10% 15V ELEC
C5	122-016	100UF 10% 25V TAN
C6	122-016	100F 10% 25V TAN
C7	122-016	100F 10% 25V TAN
C8	122-016	100F 10% 25V TAN
C9	122-016	100F 10% 25V TAN
C10	122-016	100F 10% 25V TAN
C11	122-016	100F 10% 25V TAN
C12	122-016	100F 10% 25V TAN
C13	122-016	100F 10% 25V TAN
C14	122-016	100F 10% 25V TAN
C15	122-016	100F 10% 25V TAN
C16	122-016	100F 10% 25V TAN

CR1	410-003	1N4005
CR2	410-003	1N4005
CR3	410-003	1N4005
CR4	410-003	1N4005
CR5	410-003	1N4005
CR6	410-003	1N4005
CR7	410-003	1N4005
CR8	410-003	1N4005
CR9	410-003	1N4005
CR10	410-003	1N4005
CR11	410-003	1N4005
CR12	410-003	1N4005

R1	221-010	237 1% 1/2W MF
R2	222-041	1.54K 1% 1/4W MF
R3	244-011	1K VAR

R4	221-008	127 1% 1/2W MF
R5	222-039	1K 1/4W MF
R6	244-034	200 VAR
R7	221-010	237 1% 1/2W MF
R8	222-038	649 1% 1/4W MF
R9	244-010	500 VAR
R10	221-008	127 1% 1/2W MF
R11	221-012	348 1% 1/2W MF
R12	244-033	100 VAR
R13	221-008	127 1% 1/2W MF
R14	221-012	348 1% 1/2 W MF
R15	244-033	100 VAR
R16	221-008	127 1% 1/2W MF
R17	221-012	348 1% 1/2W MF
R18	244-033	100 VAR
Z1	440-124	LM317T

LASER DRIVER BD, 6030-1 "A" 649-132
LASER DRIVER BD, 6030-1 "B" 649-133

C1	122-015	33UF 10% 35V TAN
C2	110-019	0.05UF 20% 25V CER
C3	122-009	0.68 UF 10% 35V TAN
C4	110-021	0.01UF 20% 16V CER
C5	122-001	0.47UF 10% 35V TAN
C6	110-021	0.01UF 20% 16V CER
C7		NOT USED
C8		NOT USED
C9		NOT USED
C10		NOT USED
C11	122-015	33UF 10% 35V TAN
C12	110-033	0.1UF ±20% 50V CER MONO
C13	110-033	0.1UF ±20% 50V CER MONO
C14	110-033	0.1UF ±20% 50V CER MONO
C15	110-033	0.1UF ±20% 50V CER MONO
C16	110-033	0.1UF ±20% 50V CER MONO
C17	110-033	0.1UF ±20% 50V CER MONO
C18	110-033	0.1UF ±20% 50V CER MONO
C19	110-033	0.1UF ±20% 50V CER MONO
C20	110-033	0.1UF ±20% 50V CER MONO
C21	110-033	0.1UF ±20% 50V CER MONO
C22	110-033	0.1UF ±20% 50V CER MONO
C23	110-033	0.1UF ±20% 50V CER MONO
C24	110-033	0.1UF ±20% 50V CER MONO
C25	122-015	33UF 10% 35V TAN
C26	110-033	0.1UF ±20% 50V CER MONO
C27	110-033	0.1UF ±20% 50V CER MONO
C28	110-033	0.1UF ±20% 50V CER MONO
C29	110-033	0.1UF ±20% 50V CER MONO
C30	110-033	0.1UF ±20% 50V CER MONO
C31	110-033	0.1UF ±20% 50V CER MONO
C32	110-033	0.1UF ±20% 50V CER MONO
C33	110-033	0.1UF ±20% 50V CER MONO
C34	110-033	0.1UF ±20% 50V CER MONO
C35	110-033	0.1UF ±20% 50V CER MONO
C36	110-033	0.1UF ±20% 50V CER MONO
C37	110-003	0.1UF ±20% 50V CER MONO
C38	122-015	33UF 10% 35V TAN
C39	110-033	0.1UF ±20% 50V CER MONO
C40	110-033	0.1UF ±20% 50V CER MONO
C41	110-033	0.1UF ±20% 50V CER MONO
C42	110-033	0.1UF ±20% 50V CER MONO
C43	122-015	33UF 10% 35V TAN
C44	122-015	33UF 10% 35V TAN
C45	110-033	0.1UF ±20% 50V CER MONO
C46	110-033	0.1UF ±20% 50V CER MONO
C47	110-019	0.05UF 20% 25V CER
C48		NOT USED
C49		NOT USED
C50	122-009	0.68UF 20% 35V CER
C51	112-019	15PF 5% 500V MIC
C52	110-019	0.05UF 20% 25V CER
C53	110-021	0.01UF 20% 16V CER
C54	110-033	0.1UF 20% 50V CER MONO
C55	122-009	0.68 UF 10% 35V TAN
C56	110-011	0.001UF 10% 1KV CER
C57	112-004	100PF 5% 500V MIC
C58	110-009	0.05UF 20% 25V CER
C59	122-015	33UF 10% 35V TAN
C60	110-034	100 PF +10% 25V CER
C61	110-011	0.001UF 10% 1KV CER
C62	110-021	0.01UF 20% 16V CER
C63	110-019	0.05UF 20% 25V CER
C64	110-011	0.001UF 10% 1KV CER
C65	110-034	100PF 10% 25V CER
C66	110-011	0.001UF 10% 1KV CER
C67	110-019	0.05UF 20% 25V CER
C68	122-013	3.3UF 10% 15V TAN
C69	122-010	2.2UF 10% 20V TAN

C70	110-021	0.010F 20% 16V CER
C71	112-021	5PF 5% 500V MIC
C72	110-021	0.010F 20% 16V CER
CR1	411-004	1N4152
CR2	411-004	2N4152
CR3	412-009	1N5231B
CR4	411-004	1N4152
CR5	412-012	1N5227
CR6	411-004	1N4152
CR7	411-004	1N4152
CR8		NOT USED
CR9		NOT USED
CR10	412-009	1N5231B
CR11	410-003	1N4005
CR12	411-004	1N4152
CR13		NOT USED
CR14	411-004	1N4152
CR15	411-004	1N4152
CR16	411-004	1N4152
CR17	412-009	1N52131B
CR18	413-002	1N4736
CR19	411-002	1N270
CR20	411-004	1N4152
CR21	411-004	1N4152
CR22	411-004	1N4152
CR23	411-004	1N4152
DS1	665-009	MODEL A LASER (1310 NM)
DSI	665-010	MODEL B LASER (1550 NM)
L1	318-003	4-TURN FERRITE CORE
Q1	430-027	MPS3646
Q2	430-008	2N2905
Q3	430-026	MPS3640
Q4	430-056	MM4049
Q5	430-056	MM4049
Q6	430-059	A500
Q7	430-059	A500
Q8	430-056	MM4049
Q9	430-058	LT4772
Q10	430-060	2N6041
Q11	431-006	SD210
Q12	430-027	MPS3646
R1	223-010	1K X5 RESISTOR NETWORK

R2	222-059	29.4K 1% 1/4W MF
R3	222-044	2.94K 1% 1/4W MF
R4	222-025	56.2K 1% 1/4W MF
R5	222-044	2.94K 1% 1/4W MF
R6	222-025	56.2K 1% 1/4W MF
R7	222-075	6.04M 1% 1/4W MF
R8	222-026	110K 1% 1/4W MF
R9	213-301	300 5% 1/4W CC
R10	244-011	1K VAR RESISTOR
R11	213-222	2.2K 5% 1/4W CC
R12	213-242	2.4K 5% 1/4W CC
R13	222-034	562K 1% 1/4W MF
R14	222-055	102K 1% 1/4W MF
R15	222-034	562K 1% 1/4W MF
R16	222-055	102K 1% 1/4W MF
R17	222-071	1M 1% 1/4W MF
R18	222-064	22K 1% 1/4W MF
R19	244-035	2K VAR RESISTOR
R20	213-103	10K 5% 1/4W CC
R21	213-473	47K 5% 1/4W CC
R22	244-036	10K VAR RESISTOR
R23		NOT USED
R24	213-104	100K 5% 1/4W CC
R25	213-105	1M 5% 1/4W CC
R26	213-102	1K 5% 1/4W CC
R27	213-102	1K 5% 1/4W CC
R28	213-104	100K 5% 1/4W CC
R29	213-513	51K 5% 1/4W CC
R30	222-064	22K 1% 1/4W MF
R31	222-071	1M 1% 1/4W MF
R32	222-071	1M 1% 1/4W MF
R33	213-102	1K 5% 1/4W CC
R34	213-105	1M 5% 1/4W CC
R35	213-105	1M 5% 1/4W CC
R36	213-104	100K 5% 1/4W CC
R37	244-036	10K VAR RESISTOR
R38	222-051	10K 1% 1/4W MF
R39	222-071	1M 1% 1/4W MF
R40	222-071	1M 1% 1/4W MF
R41	213-513	51K 5% 1/4W CC
R42	244-036	10K VAR RESISTOR
R43		NOT USED
R44		NOT USED
R45		NOT USED
R46		NOT USED
R47		NOT USED
R48		NOT USED

R49		NOT USED
R50	222-014	499 1% 1/4W MF
R51	222-014	499 1% 1/4W MF
R52	213-471	470 5% 1/4W CC
R53	214-820	82 5% 1/8W CC
R54	214-131	130 5% 1/8W CC
R55	214-101	100 5% 1/8W CC
R56	222-026	110K 1% 1/4W MF
R57	222-026	110K1% 1/4W MF
R58	213-102	1K 5% 1/4W CC
R59	214-820	82 5% 1/8W CC
R60	214-510	51 5% 1/8W CC
R61	214-131	130 5% 1/8W CC
R62	214-820	82 5% 1/8W CC
R63	214-131	130 5% 1/8 W XX
R64	214-102	1K 5% 1/8W CC
R65	222-026	110K 1% 1/4W MF
R66	222-026	110K 1% 1/4W MF
R67	213-102	1K 5% 1/4W CC
R68	213-102	1K 5% 1/4W CC
R69	222-026	110K 1% 1/4W MF
R70	222-055	102K 1% 1/4W MF
R71	222-070	95.3K 1% 1/4W MF
R72	222-026	110K 1% 1/4W MF
R73	222-026	110K 1% 1/4W MF
R74	222-026	110K 1% 1/4W MF
R75	214-680	68 5% 1/8W CC
R76	222-051	10K 1% 1/4W MF
R77	222-043	2.37K 1% 1/4W MF
R78	222-051	10K 1% 1/4W MF
R79	213-150	15 5% 1/4W CC
R80	222-017	2.15K 1% 1/4W MF
R81	213-151	150 5% 1/4W CC
R82	213-330	33 5% 1/4W CC
R83	244-032	50 20-TURN RES
R84	213-101	100 5% 1/4W CC
R85	222-026	110K 1% 1/4W MF
R86	213-102	1K 5% 1/4W CC
R87	213-221	220 5% 1/4W CC
R88	213-102	1K 5% 1/4W CC
R89	214-561	560 5% 1/8W CC
R90	214-680	68 5% 1/8W CC
R91	214-510	51 5% 1/8W CC
R92	214-131	130 5% 1/8W CC
R93	214-391	390 5% 1/8Q XX
R94	214-510	51 5% 1/8W CC
R95	222-026	110 1% 1/4W MF
R96	213-106	10M 5% 1/4W CC
R97	213-102	1K 5% 1/4W CC
R98	214-510	51 5% 1/8W CC
R99	213-102	1K 5% 1/4W CC
R100	213-103	10K 5% 1/4W CC
R101	213-102	1K 5% 1/4W CC
R102	213-102	1K 5% 1/4W CC
R103	244-011	1K VAR RESISTOR
R104	231-008	2 1% 10W WW
R105	222-050	8.66K 1% 1/4W MF
R106	213-104	100K 5% 1/4W CC
R107	214-510	51 5% 1/8W CC
R108	214-470	47 5% 1/8W CC
R109	214-470	47 5% 1/8W CC
R110	213-103	10K 5% 1/4W CC
R111	214-750	75 5% 1/8W CC
R112	214-220	22 5% 1/8W CC
R113	214-100	10 5% 1/8W CC
R114	213-105	1M 5% 1/4W CC
R115	213-103	10K 5% 1/4W CC
R116	222-013	422 1% 1/4W MF
R117	213-511	510 5% 1/4W CC
R118	213-105	1M 5% 1/4W CC
R119	214-101	100 5% 1/8W CC
R120	213-103	10K 5% 1/4W CC
R121	214-390	39 5% 1/8W CC
R122	213-102	1K 5% 1/4W CC
R123	213-222	2.2K 5% 1/4W CC
R124	213-102	1K 5% 1/4W CC
R125	222-017	2.15K 1% 1/4W MF
R126	222-042	2K 1% 1/4W MF
R127	213-510	51 5% 1/4W CC
R128	213-105	1M 5% 1/4W CC
R129	213-223	22K 5% 1/4W CC
R130	213-223	22K 5% 1/4W C
R131	213-103	10K 5% 1/4W CC
R132	213-103	10K 5% 1/4W CC

Z1	440-168	LF412
Z2	440-168	LF412
Z3	440-004	MC10105
Z4	440-041	MC10125
Z5	440-095	74LS00
Z6	440-068	LF412
Z7	440-068	LF412
Z8	440-168	LF412

Z9	440-170	DG201A
Z10	440-143	NE529
Z11	440-168	LF412
Z12	440-170	DG201A
Z13	440-168	LF412
Z14	440-170	DG201A
Z15	440-168	LF412
Z16	440-168	LF412
Z17	440-144	555

DISPLAY BD, 6020-2 649-093

C1	122-016	10UF 10% 15V TAN
C2	112-018	68PF 5% 500V MIC
C3	114-018	0.047PF 10% 200V MYL
C4	110-021	0.01UF 20% 16V CER
C5	114-018	0.047PF 10% 200V MYL
C6	115-001	0.1UF 10% 50V POLYSTYRENE
C7	122-016	10UF 10% 15V TAN
CR1	412-009	1N5231B 5% 5.1V
CR2	412-001	1N821 5% 6.2V
DS1	409-002	HDSP-3531
DS2	409-002	HDSP-3531
DS3	409-002	HDSP-3531
Q1	430-026	MPS3640
R1	213-104	100K 5% 1/4W COMP
R2	213-681	680 5% 1/4W COMP
R3	244-010	500 VAR
R4	222-050	8.66K 1% 1/4W MF
R5	222-014	499 1% 1/4W MF
R6	222-071	1M 1% 1/4W MF
R7	222-025	56.2K 1% 1/4W MF
R8	213-473	47K 5% 1/4W COMP
R9	213-561	560 5% 1/4W COMP
R10	213-103	10K 5% 1/4W COMP
R11	213-333	33K 5% 1/4W COMP
Z1	440-131	7107 CPL 3-1/2 DIGIT A/D CONVERTER

MISCELLANEOUS

FRONT PANEL ASSEMBLY 640-030

C801	122-016	10UF 10% 15V TAN
C802	122-002	1UF 10% 35V TAN
C803	114-029	0.1UF 10% 80V MYLAR
C804	114-025	0.01UF 10% 200V MYLAR
C805	114-001	0.001UF 10% 600V MYLAR
C806	122-016	10UF 10% 15V TAN
C807	122-002	1UF 10% 35V TAN
C808	114-029	0.1UF 10% 80V MYLAR
C809	114-025	0.01UF 10% 200V MYLAR
C810	114-001	0.001UF 10% 600V MYLAR
C811	114-029	0.1UF 10% 80V MYLAR
DS801	416-004	LED YELLOW
DS802	416-004	LED YELLOW
DS803	416-003	LED RED
J801	624-002	BNC CONNECTOR
J802	624-002	BNC CONNECTOR
J803	624-002	BNC CONNECTOR
J804	626-050	BNC CONNECTOR & CABLE
R800	242-008	10K VAR
R801	213-273	27K 5% 1/4W COMP
R802	213-270	27 5% 1/4W COMP
R803	213-270	27 5% 1/4W COMP
R804	213-270	27 5% 1/4W COMP
R805	213-273	27K 5% 1/4W COMP
R806	213-270	27 5% 1/4W COMP
R807	213-270	27 5% 1/4W COMP
R808	213-270	27 5% 1/4W COMP
R809	242-009	10K VAR W/TAPER 3T
R810	242-009	10K VAR W/TAPER 3T
R811	240-021	1K VAR
R812	242-006	1K VAR, WW 10T
R813	242-009	10K VAR W/TAPER 3T
S801	610-028	ROTARY SWITCH, AJD STOP
S802	610-028	ROTARY SWITCH, ADJ. STOP
S803	610-028	ROTARY SWITCH, ADJ. STOP
S804	612-002	PB SWITCH
S805	611-006	SPDT SWITCH
S806	611-006	SPDT SWITCH

S807	610-031	ROTARY SWITCH, AJD. STOP
S808	616-005	KEY SWITCH
S809	612-002	PB SWITCH

REAR PANEL ASSEMBLY 640-018

F901	634-010	FUSE, 3AF, 1.5A
P901	623-003	SOCKET, LINE CORD 0.6A 250V
S901	613-002	SWITCH, SLIDE, 115-230V
S902	616-004	SWITCH, TEMP SENS.
Z901	440-124	LM317T
Z902	440-125	LM337T
Z903	440-125	LM337T
Z904	440-125	LM337T
Z905	440-125	LM337T
B901	631-001	FAN

TOP ASSEMBLY, MODEL A 801-092
TOP ASSEMBLY, MODEL B 801-093

320-005	TRANSFORMER, 320 K-10
410-005	PA-10 BRIDGE
225-018	VARISTOR,130V
623-004	CORD SET, 10 AMP, 7-1/2" LONG
640-031	FC ADAPTER PLATE ASSEMBLY
663-009	FO CABLE DORRAN TO FC

LTR	DESCRIPTION	DATE	APPROVED

S801
DWG 6030-30
FREQUENCY
100 MHz
10 MHz
1 MHz
100 KHz
10 KHz
1 KHz
EXT TRIG
EXT DR
SINGLE CYCLE

S804
DWG 6030-31
SINGLE CYCLE

FREQUENCY VAR

S802
DWG 6030-32
DELAY
10ms
1ms
100µs
10µs
1µs
100ns
R801 27K
DELAY VAR

S803
DWG 6030-32
WIDTH
10ms
1ms
100µs
10µs
1µs
100ns
SQ WAVE
IMPULSE
R805 27K
WIDTH VAR

TRIG LEVEL

S806
DWG 6030-31
SNGL PULSE/ DBL PULSE

S805
DWG 6030-31
TRIG SLOPE
OVER LAP

EXT TRIG/DR J801
TRIG OUT J802
PULSE OUT J803

MOTHER BOARD
TIMING CIRCUITS
PCB 6020-1

DWGS 6030-31
6030-32
6030-30

+6V
+12V
-5.2V

DRIVE
PULSE OUT DRIVE

PULSE OUT EQUALIZER
PCB 6020-1
DWG 6030-31

DISPLAY
PCB 6020-2
DWG 6030-35
-5.2V
+6V
+12V

S809
DWG 6030-34
READ
LOW
HIGH

+6V
LASER GUARD
DWG 6030-34
LASER ACTIVE
DWG 6030-34
IMPULSE
REP RATE ENABLE
LIGHT OUT

DRIVER PCB 6030-1
DWG 6030-34

P2
-5.2V
+6V
-12V
+12V
GND (+TEC)
-5.2V(-TEC)

POWER SUPPLY PCB 6020-3
DWG 6030-37
-5.2V
+6V
-12V
+12V
117V/234V

DWG 6030-34
+6V
R152
Q30
PRE BIAS
ZERO BIAS
CW
EXT MOD

S807
DWG 6030-34
MODE

PEAK
BASELINE
J804
EXT MODULATION

LASER GUARD RECOVERY CIRCUIT
DWG 6030-36

NOTES: (UNLESS OTHERWISE SPECIFIED)
1. [ ] DENOTES FRONT PANEL LETTERING.
2. ☐ DENOTES P.C. BOARD TERMINALS.
3. [ ] DENOTES EDGE CONNECTORS.

BNC BERKELEY NUCLEONICS CORP.
1198 TENTH ST., BERKELEY, CA 94710

APPROVALS	DATE
DRAWN AL	9/25/67
CHECKED	
ISSUED	

UNLESS OTHERWISE SPECIFIED DIMENSIONS ARE IN INCHES TOLERANCES ARE: FRACTIONS ±1/32; .XX ±.01; .XXX ±.005; ANGLES ±1°
DO NOT SCALE DRAWING

LIGHT PULSE GENERATOR
INTERCONNECTION DIAGRAM

MODEL NO. 6030 | SIZE D | DWG. NO. 6030-29 | REV
SCALE — | SHEET 1 OF 1

REVISIONS				
ZONE	LTR	DESCRIPTION	DATE	APPROVED

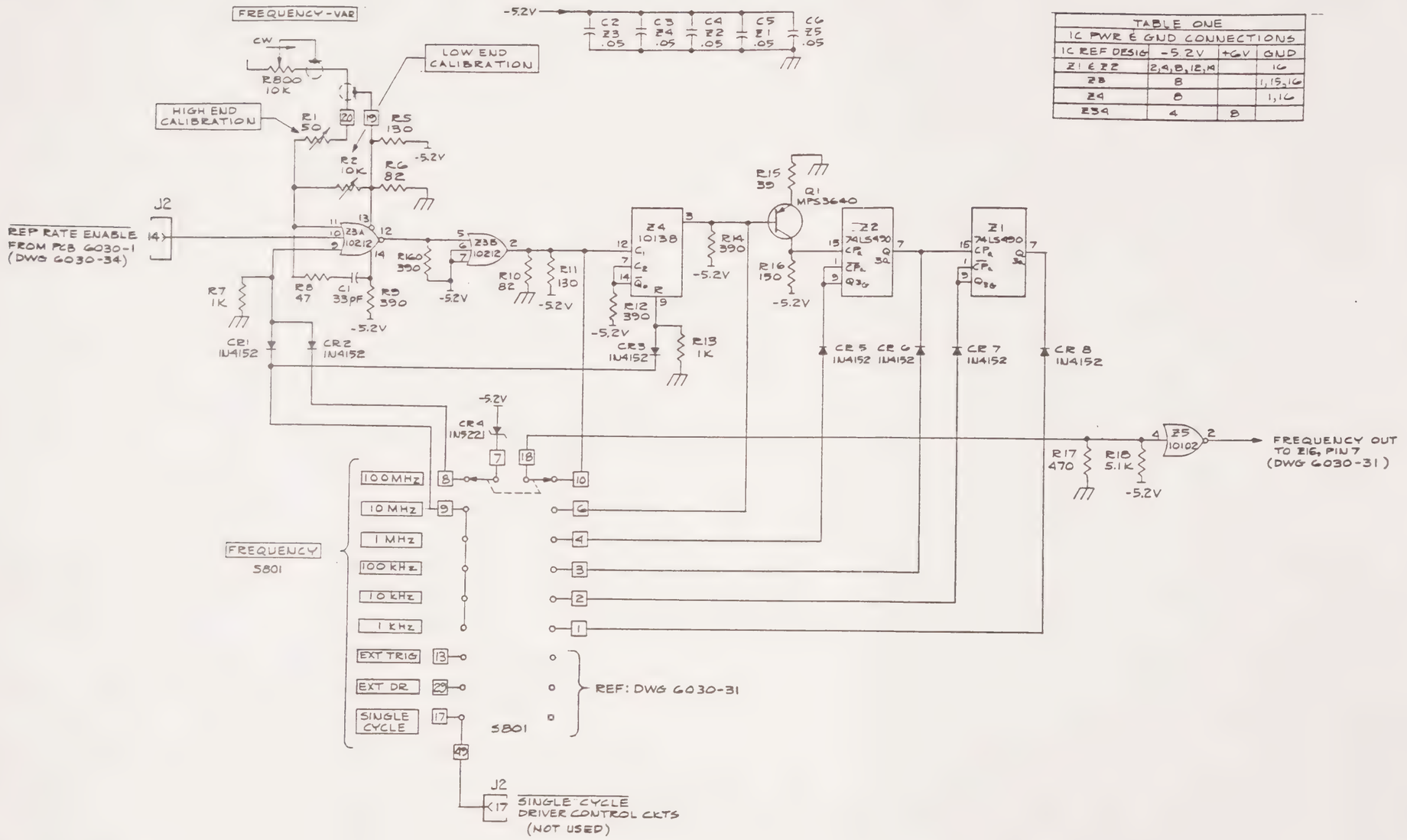

TABLE ONE			
IC PWR & GND CONNECTIONS			
IC REF DESIG	-5.2V	+5V	GND
Z1 & Z2	2,4,8,12,14		16
Z3	8		1,15,16
Z4	8		1,16
Z5A	4	8	

NOTES:
UNLESS OTHERWISE SPECIFIED:
1. IC PWR & GND CONNECTIONS ARE SHOWN IN TABLE 1.
2. ALL RESISTORS ARE 1/4 W, 5 %.
3. ☐ DENOTES PC BOARD TERMINALS.
4. ▭ DENOTES FRONT PANEL LETTERING.

REF: PCB 6020-1

Z1	Z5	
UB01	UB01	
RB0	RB0	
R1	R160	RB-R159, R3, R4
Q1	Q1	
CR1	CR8	
C1	C7	
FIRST	LAST	OMITTED

REFERENCE DESIGNATIONS

BNC BERKELEY NUCLEONICS CORP.
1198 TENTH ST., BERKELEY, CA 94710

SCALE	APPROVED BY	DRAWN BY
DATE 5/24/85	dwp	REVISED

LIGHT PULSE GENERATOR MOD. 6030

TIMING-FREQUENCY CKTS | D | DRAWING NUMBER 6030-30

© BNC GRAPHICS INC
BERKELEY, CALIFORNIA

REVISIONS				
ZONE	LTR	DESCRIPTION	DATE	APPROVED

FREQUENCY
S801
(REF: DWG 6030-30)

EXT TRIG
EXT DRIVE
SINGLE CYCLE

CR9 1N4152
CR24 1N270
CR4 REF.
-5.2V
R21 100
R22 1K
R19 470
R20 470

SINGLE CYCLE
S804
C811 0.1μF
C12 100pF
R23 10K
R24 10K
R25 *

FREQUENCY IN FROM Z5, PIN 2 (DWG 6030-30)

S805
TRIG SLOPE
R26 10K

EXT TRIG/DR.
J801
R29 390
R30 5.6Ω 2W
R31 91
R32 15K
R34 1.2K
R35 120
R36 3.6K
C7
C8 .05
C9
R28 510

TRIG LEVEL
R811 1K CW

WIDTH
S803
SQ. WAVE
IMPULSE
TO PIN 6 DISPLAY 6020-2 (DWG 6030-35)

R27 *
R37 1K
Q31 MPSG531
R38 820
CR11 1N4152
CR10 1N4152
R49 1K

J2
IMPULSE CONTROL TO PCB 6030-1 (DWG 6030-34)
IMPULSE CONTROL TO CR26 PCB 6020-1 (DWG 6030-33)
FROM 7 DISPLAY PCB 6020-2 (DWG 6030-35)

R39 *
R27, *
C10, Δ
R44 200
R53 510
R45 390
DELAY TRIG TO Z6, PIN 10 (DWG 6030-32)
CR30 1N4152
R33 1K

T1
Q3 2N5179
Q4 2N5179
R40 390
R41 390
R51 100
R42 51
R43 51
+6V
+12V
R47 68 1W
Q6 2N5583
Q5 2N5583
R50 10
R49 200
J802
TRIG OUT

R54 100
R55 *
R56 100
R57 100
R58 100
R59 100
R60 *
R61 100
R62 100
R52 390
DELAY PULSE FROM Z19, PIN 14 (DWG 6030-32)

DOUBLE
S806
SINGLE
R64 510
R63 *
R46 390
R65 510
R48 390
WIDTH TRIG TO Z24, PIN 4 (DWG 6030-32)

WIDTH PULSE FROM Z32, PIN 3 (DWG 6030-32)
R66, *
DRIVE FROM Z29, PIN 9 (DWG 6030-33)
R163 330
R164 220
T2
Q7 2N5179
Q8 2N5179
R68 390
R69 390
R74 100
R78 10
R79 200
J803
PULSE OUT
Q10 2N5583
Q9 2N5583
R70 51
R71 51
R76 68 1W
R67 1K
DRIVE TO R166 (DWG 6030-33)

C13 .05 Z16
C14 .05 Z17
C15 .05 Z21
C16 .05 Z20
C17 .05 Z27
C18 .05 Z26
C19 .05 Z19
C20 .05 Z15
C21 .05 Z33

REF: PCB 6020-1

NOTES:
UNLESS OTHERWISE SPECIFIED:
1. IC PWR CONNECTIONS ARE SHOWN IN TABLE 1.
2. ALL RESISTORS ARE 1/4 W, 5%.
3. ALL CAPACITORS ARE .05 μF.
4. ALL CAPACITORS <1.0 ARE IN μF, > 1.0 ARE IN pF.
5. * DENOTES RESISTOR NETWORKS:
   R25, R27, R39, R63 & R66 ARE 330Ω, 220Ω, 6 RESISTOR SIPS: 220 GOES TO GND, 330 GOES TO -5.2V.
   R55 & R60 ARE 390Ω, 5 RESISTOR SIPS.
6. □ DENOTES PC BOARD TERMINALS.
7. ▭ DENOTES FRONT PANEL LETTERING.
8. Δ DENOTES FACTORY SELECT.

TABLE ONE
IC PWR & GND CONNECTIONS

IC REF DESIG	+6V	-5.2V	GND
Z5, Z14-Z17, Z20 Z21, Z26, Z27, Z33		8	1, 16
Z22	1	5	9, 10

C811		
J801	J803	
Z5	Z33	Z6-Z13, Z18, Z19, Z22, Z23-Z25, Z28-Z32
T1	T2	
S801	S806	S808
R811	R811	
R19	R164	R72-73, 75, 77, 80-148, 150-162
Q3	Q31	Q11-Q30
CR9	CR30	CR12-CR23 CR25-CR29
C7	C21	C11
FIRST	LAST	OMITTED

REFERENCE DESIGNATIONS

BNC BERKELEY NUCLEONICS CORP.
1198 TENTH ST., BERKELEY, CA 94710

SCALE NA	APPROVED BY	DRAWN BY SC
DATE		REVISED

LIGHT PULSE GENERATOR 6030

TIMING CIRCUITS | D | DRAWING NUMBER 6030-31

REVISIONS			
LTR	DESCRIPTION	DATE	APPROVED

DELAY

S802

10ms
1ms
100µs
10µs
1µs
5-100ns

R814 22K
R804 27
CB01, 10µF
CB02, 1µF
CB03, .1µF
CB04 .01µF
CB05 .001µF
CR15 1N5221
R80 22
CR12 1N270
R97 2.2K
+12V
R89 47K
C24 10µF
C77, 33µF, 10V
R90 9.9K 1%
R91 1.4K 1%
R92 3.57K, 1%
R93 909 1%
C25 1µF
R94 2.2K
L1 .33µH
+6V
CR13 1N4152
R95 330
Z12 10124
R96 *
-5.2V
DELAY - VAR
R809 10K
CW
Q12 MPS3640
Q16 MPS 3646
R81 510
R82 470
VH
Z6 10102
R85, *
Q11 MPS3646
CR14 1N4152
R119 1K
C83 470
R102 1.3K
+12V
Q18 MPS3640
C23 100pf
R99 10K
R100 10K 1%
Q19 2N5179
+6V
C26 15pF
R105 82
R106 2.7K
R107 2.15K 1%
Z13 685
R103 390
R104 82
Q17 MPS3640
Q13 MPS3646
R83 *
R85 240
C22 22pF
R86 270
R83 *
DELAY TRIGGER FROM Z16 PIN 9 (DWG 6030-31)
Z7 10H 102
Q14 2N5179
Q15 2N5179
R84 *
R88 150
R87 200
R98 *
R101 390
Z8 10H 102
Z10 10H131
T10 T14 C67 C72 33µf
-12V
12V
T5 T9 T13 T17 C38 C39 C40 C71 33µF .05 Z11 Z30
T7 T12 T16 T18 C34 C35 C36 C37 C73 33µF .05 Z12 Z13 Z31
T3 T4 T6 T8 T11 T15 C41 C60 C68 C70 C75 C76 33µF .05 Z6 Z7 Z11 Z12 Z13 Z8 Z10 Z23 Z24 Z9 Z25 Z18 Z30 Z31 Z32
C42 C43 C44 C45 C46 C48
C49 C50 C51 C52 C53 C54 C55 C56 C57
Z19 10102
C27 5pF
R142 220
R151 150
DELAY PULSE Z27, PIN 5 (DWG 6030-31)
WIDTH TRIGGER FROM Z26, PIN 9 (DWG 6030-31)
Z24 101 02
R111 *
R165 240
R110 100
R112 2.2K
CR16 1N270
R127 22
CR17 1N4152
R108 510
R109, 470
R113, * 33pF
Q20 MPS3646
R114 240
Q22 MPS 3646
R115 270
R113 *
C28 22pF
Z25 10H 102
Q23 2N5179
Q24 2N5179
R117 *
R150 150
R116 500
C29 100pF
R133 910
R130 10K
R131 10K 1%
Q28 2N5179
Q27 MPS3640
R134 390
R135 82
R136 82
R137 2.7K
R138 2.15K 1%
R128 *
Z31 685
Z32 10H 102
WIDTH PULSE TO Z33, PIN 4 (DWG 6030-31)
WIDTH
S803
10ms
1ms
100µs
10µs
1µs
5-100ns
SQ WAVE
IMPULSE
REF: (DWG 6030-31)
CR19 1N5221
R815 22K
R808 27
CB06, 10µF
CB07, 1µF
CB08, .1µF
R807 27
CB09 .01µF
CB10, .00µF
R120 47K
C31 10µF
C78, 33µF
R121 5.9K 1%
R122 1.4K 1%
R123 3.97K, 1%
R124 909, 1%
L2 .33µH
+6V
Z30 556
C33 1µF
R125 2.2K
R126 330
Z12 10124
WIDTH - VAR
R810 10K
CW
Q21 MPS3640
Q25 MPS 3646
C84 470
R133 910
R116 500
+12V
R130 10K
C29 100pF
Q26 MPS3640
R131 10K 1%
Q28 2N5179
Q27 MPS3640
R134 390
R135 82
R136 82
R137 2.7K
R138 2.15K 1%
R128 *
Z31 685
Z32 10H 102
WIDTH PULSE TO Z33, PIN 4 (DWG 6030-31)
Z18 10H 102
R141, *
CB1 22pF
CB2 22pF
C30 10µF
R140 2.2K
R132 200
R141 *
Q29 MPS3640
R139 100
R141, *
CR29 1N270
DS801
OVER LAP
Z10 10H131
R118 *
Z9 10H 102
R98 *
-5.2V

NOTES:
UNLESS OTHERWISE SPECIFIED:
1. IC PWR & GND CONNECTIONS ARE SHOWN IN TABLE ONE.
2. ALL RESISTORS ARE 1/4 W, 5 %.
3. □ DENOTES PC BOARD TERMINALS.
4. ▭ DENOTES FRONT PANEL LETTERING.
5. * INDICATES RESISTOR NETWORKS:
   R83, R96, R113, R141 ARE 390Ω.
   R84, R98, R111, R117, R118, R128 ARE 220/330Ω.
   220 GOES TO GND, 330 GOES TO -5.2V.
6. Δ DENOTES FACTORY SELECT.

TABLE 1				
IC POWER & GND CONNECTIONS				
IC REF. DESIG.	+6V	+12V	-5.2V	GND
Z6, Z7, Z8, Z9 Z10, Z18, Z19, Z23 Z24, Z25, Z32			8	1, 16
Z11, Z30		7	4	
Z13, Z31	1		5	9, 10
Z12	9		8	16

REF: PCB 6020-1

Z6	Z32	Z14-Z17, Z20-Z22, Z26-Z29
T3	T18	
S802	S803	
R802	R815	R805, 811, 812
R80	R165	R143-R149, R112, R152-R164
Q11	Q29	
L1	L2	
DS801	DS801	
CR12	CR29	CR21-CR28
CB01	CB10	
C22	CB4	CG1, C74, C79-CB0, C63-C65, 47
FIRST	LAST	OMITTED

REFERENCE DESIGNATIONS

BNC BERKELEY NUCLEONICS CORP.
1198 TENTH ST., BERKELEY, CA 94710

SCALE ~	APPROVED BY BWP	DRAWN BY SWC
DATE		REVISED

LIGHT PULSE GENERATOR MODEL 6030

TIMING - DELAY & WIDTH CKTS | D | DRAWING NUMBER 6030-32

BISHOP GRAPHICS INC
REORDER NO. 1856

REVISIONS				
ZONE	LTR	DESCRIPTION	DATE	APPROVED

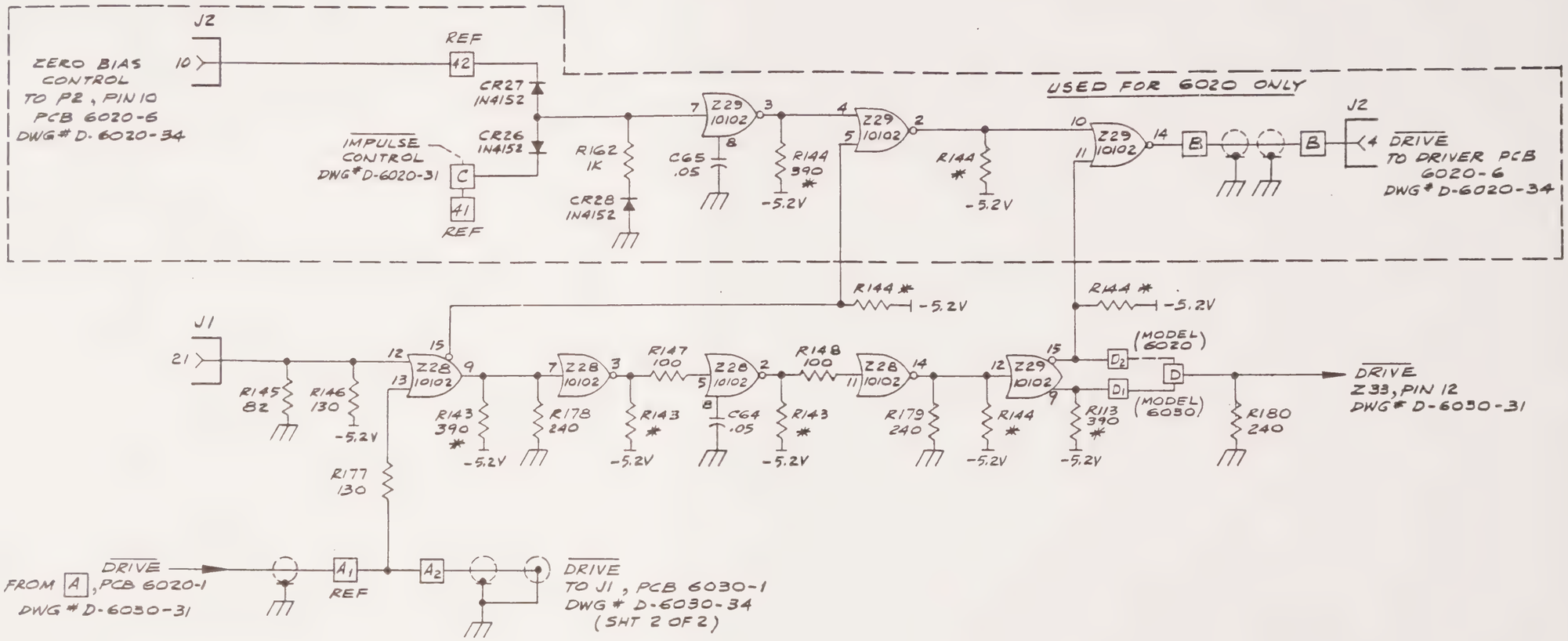

NOTES: (UNLESS OTHERWISE SPECIFIED)

1. ALL RESISTORS ARE IN OHM (Ω), 1/4 W, 5%.
2. ALL CAPACITORS < 1.0 ARE IN μF,
   > 1.0 ARE IN pF.
3. ☐ DENOTES P.C. BOARD TERMINALS.
4. * DENOTES 390Ω RESISTOR NETWORKS.

REF: PCB 6020-1

Z28	Z29	
R113	R169	R114 - 142, R145 - 165
CR26	CR28	
C64	C65	
FIRST	LAST	OMITTED

REFERENCE DESIGNATIONS

BNC BERKELEY NUCLEONICS CORP.
1198 TENTH ST., BERKELEY, CA 94710

SCALE: —	APPROVED BY:	DRAWN BY AL
DATE: 2/27/87		REVISED

6030
LIGHT PULSE GENERATOR

PULSE OUT EQUALIZER	SIZE C	DRAWING NUMBER 6030-33

17233 PRINTED ON NO. 1000H CLEARPRINT

REVISIONS			
LTR	DESCRIPTION	DATE	APPROVED
A	CHG'D VALUES OF R10, 29, 30, 38, R81, 874 103. DELETED C57. ADDED R133 (ECO# 87-030)	10/30/87	AL
B	CHG'D VALUES OF R7, 17 (R7 WAS: 6.04M, R17 WAS: 1M) PER ECO# 89-001	7/17/89	AL

NOTES: (UNLESS OTHERWISE SPECIFIED)
1. ALL RESISTORS ARE 1/4W, 5%, CARBON COMPOSITION.
2. ALL CAPS ARE .1μF, 50V, ±20%, CER. MONOLITHIC. ALL CAPS >1.0 ARE IN PF, <1.0 ARE IN μF.
3. ☐ DENOTES PCB TERMINALS.
4. ▭ DENOTES FRONT PANEL LETTERING.
5. I.C. POWER & GND CONNECTIONS ARE SHOWN IN TABLE 1

REF: FRONT PANEL

S807	S809
RB12	RB13
DS802	

REF: PCB 6020-1

R152	R152
Q30	Q30
CR25	CR25

REF: PCB 6030-1

Z4	Z17	
R1	R132	R43-R131, R133
CR1	CR9	
C1	C47	C7-C10
FIRST	LAST	OMITTED

REFERENCE DESIGNATIONS

BNC BERKELEY NUCLEONICS CORP.
1198 TENTH ST., BERKELEY, CA 94710

APPROVALS	DATE
DRAWN J.W.C	1/13/87
CHECKED	
ISSUED	

UNLESS OTHERWISE SPECIFIED DIMENSIONS ARE IN INCHES. TOLERANCES ARE: FRACTIONS ±1/32; DECIMALS .XX ±.01; .XXX ±.005; ANGLES ±1°. DO NOT SCALE DRAWING

LASER DRIVER CIRCUITS

MODEL NO.	SIZE	DWG. NO.	REV
6030	D	6030-34	B

SCALE – SHEET 1 OF 2

REVISIONS			
LTR	DESCRIPTION	DATE	APPROVED

CW OR BASELINE LEVEL FROM Z8, PIN 1 SHT 1 OF 2

EXT MODE OR PULSE AMPLITUDE FROM Z8, PIN 7 VIA CR6 SHT 1 OF 2

EXT MODE FROM Z4, PIN 10 SHT 1 OF 2

CW FROM Z4, PIN 14 SHT 1 OF 2

IMPULSE FROM Z4, PIN 2 SHT 1 OF 2

DRIVE

INPUT COMPENSATION FROM R42 SHT 1 OF 2

IMPULSE FEED BACK TO Z6, PIN 6 SHT 1 OF 2

EXT MOD OR CW FEED BACK TO Z16, PIN 6 SHT 1 OF 2

MODE CHANGE FROM P2, PIN 27 AND Z15, PIN 2 VIA CR5, 6 SHT 1 OF 2

T IMPULSE FROM Z5, PIN 3 & 4 SHT 1 OF 2

CROWBAR TO Z17, PIN 2 SHT 1 OF 2

EXT MOD INPUT

LASER MODULE

TABLE 1					
I.C. REF DESIG.	GND	-5.2V	-12V	+6V	+12V
Z1, 2, 6, 7, 8, 11, 13, 15, 16			4		8
Z9, 12, 14	5		4		13
Z3	1, 16	8			
Z4	16	8		9	
Z5	7			14	
Z10	10		6	1, 14	
Z17	1			8, 4	

REF PCB 6030-1

Z1	Z10	Z4-6, 8, 9
R30	R133	R132
Q1	Q12	
J1	J2	
L1	L1	
DS1	DS1	
CR10	CR23	
C90	C74	C57
FIRST	LAST	

REFERENCE DESIGNATIONS

BNC BERKELEY NUCLEONICS CORP.
1198 TENTH ST., BERKELEY, CA 94710

APPROVALS	DATE
DRAWN	
CHECKED	
ISSUED	

UNLESS OTHERWISE SPECIFIED: DIMENSIONS ARE IN INCHES; TOLERANCES ARE: FRACTIONS ±1/64, DECIMALS .XX ±.01, .XXX ±.005, ANGLES ±1°

DO NOT SCALE DRAWING

LASER DRIVER CIRCUITS

MODEL NO.	SIZE	DWG. NO.	REV.
6030	D	6030-34	B

SCALE —

SHEET 2 OF 2

BISHOP GRAPHICS INC
RECORD # NO 1854

REVISIONS				
ZONE	LTR	DESCRIPTION	DATE	APPROVED

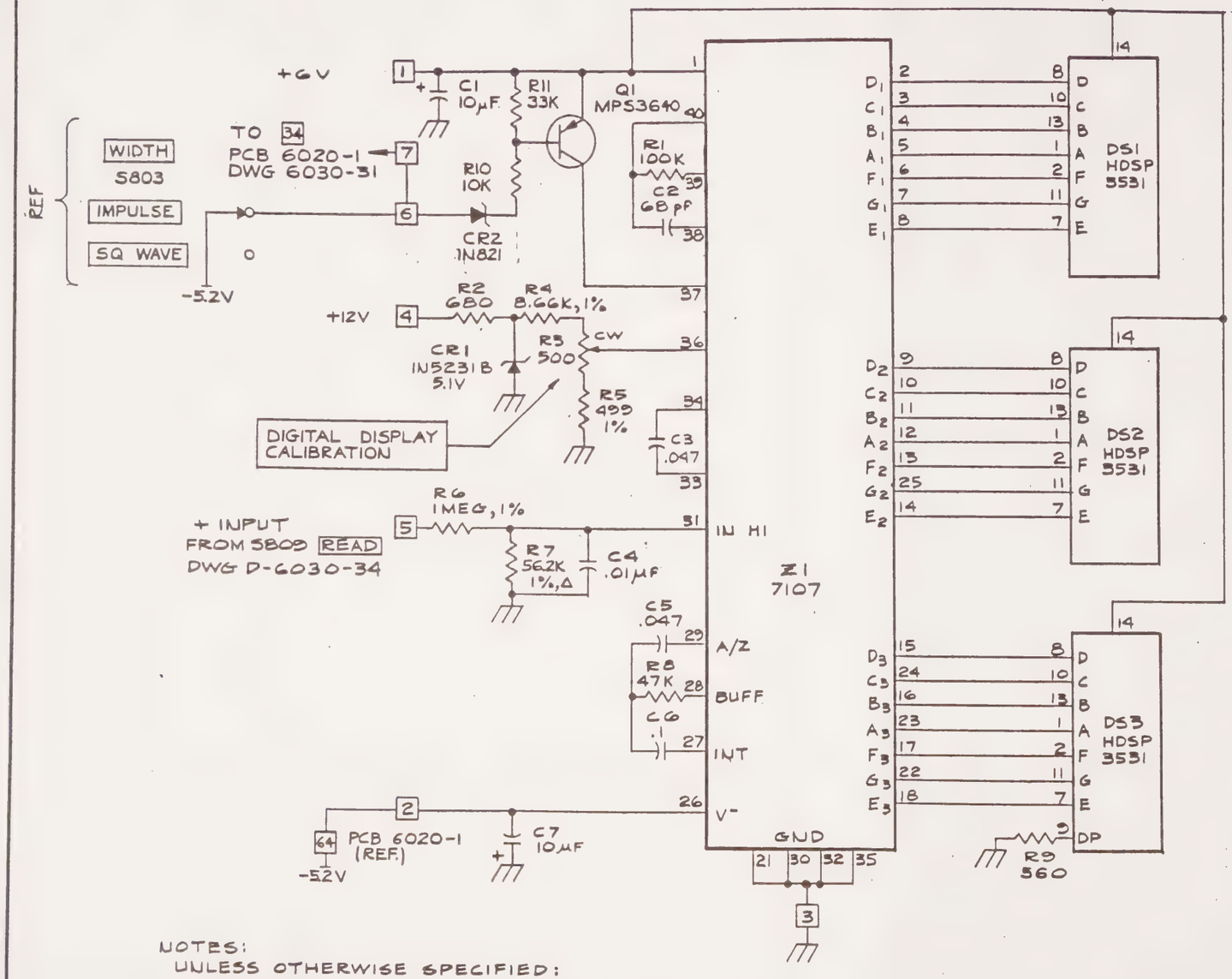

NOTES:
UNLESS OTHERWISE SPECIFIED:
1. ALL RESISTORS ARE 1/4 W, 5%.
2. ALL CAPACITORS <1.0 ARE IN µF, >1.0 ARE IN pF.
3. □ DENOTES BOARD TERMINALS.
4. ▭ DENOTES FRONT PANEL LETTERING.
5. Δ DENOTES FACTORY SELECT

REF: PCB 6020-2

Z1	Z1	
R1	R10	
Q1	Q1	
DS1	DS3	
CR1	CR2	
C1	C7	
FIRST	LAST	OMITTED

REFERENCE DESIGNATIONS

BNC BERKELEY NUCLEONICS CORP.
1198 TENTH ST., BERKELEY, CA 94710

SCALE NA	APPROVED BY [illegible]	DRAWN BY SWC
DATE 6/19/83		REVISED

LIGHT PULSE GENERATOR 6030

DISPLAY CIRCUITS | C | DRAWING NUMBER 6030-35

KLINGLER KVEL

REVISIONS			
LTR	DESCRIPTION	DATE	APPROVED

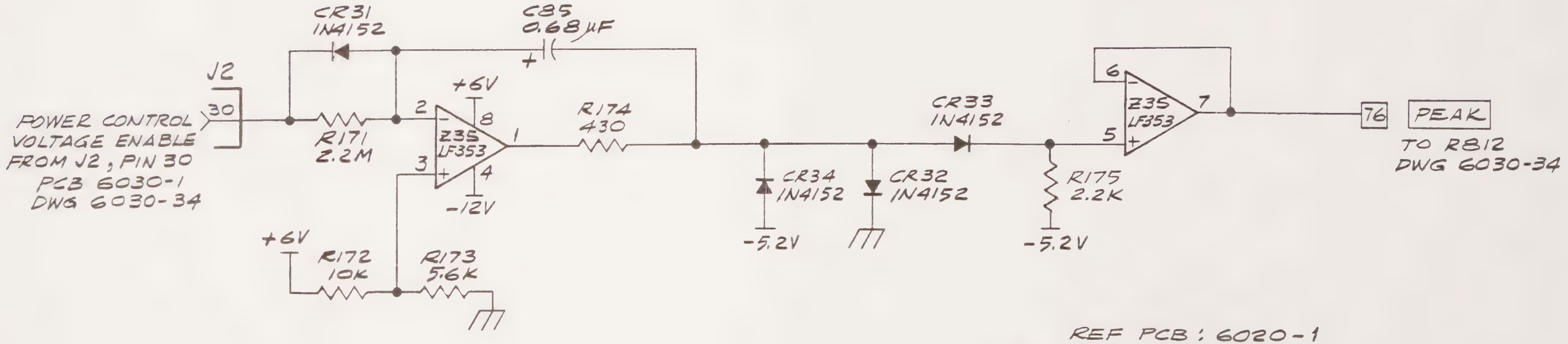

NOTES:
UNLESS OTHERWISE SPECIFIED:
1. ALL RESISTORS ARE 1/4 W, 5%, CARBON COMPOSITION.
2. ☐ DENOTES P.C. BOARD TERMINAL.
3. ▭ DENOTES FRONT PANEL LETTERING.

REF PCB: 6020-1

Z35	Z35	
R171	R175	
J2	J2	
CR31	CR34	
C85	C85	
FIRST	LAST	OMITTED

REFERENCE DESIGNATIONS

UNLESS OTHERWISE SPECIFIED
DIMENSIONS ARE IN INCHES
TOLERANCES ARE:
FRACTIONS ± DECIMALS .XX ± .XXX ± ANGLES ±

DO NOT SCALE DRAWING

BNC **BERKELEY NUCLEONICS CORP.**
1198 TENTH ST., BERKELEY, CA 94710

APPROVALS	DATE
DRAWN AL	3/31/87
CHECKED [illegible]	8-10-87
ISSUED	

LASER GUARD RECOVERY CIRCUIT

MODEL NO.	SIZE	DWG. NO.	REV.
6030	B	6030-36	

SCALE — SHEET 1 OF 1

REVISIONS				
ZONE	LTR	DESCRIPTION	DATE	APPROVED

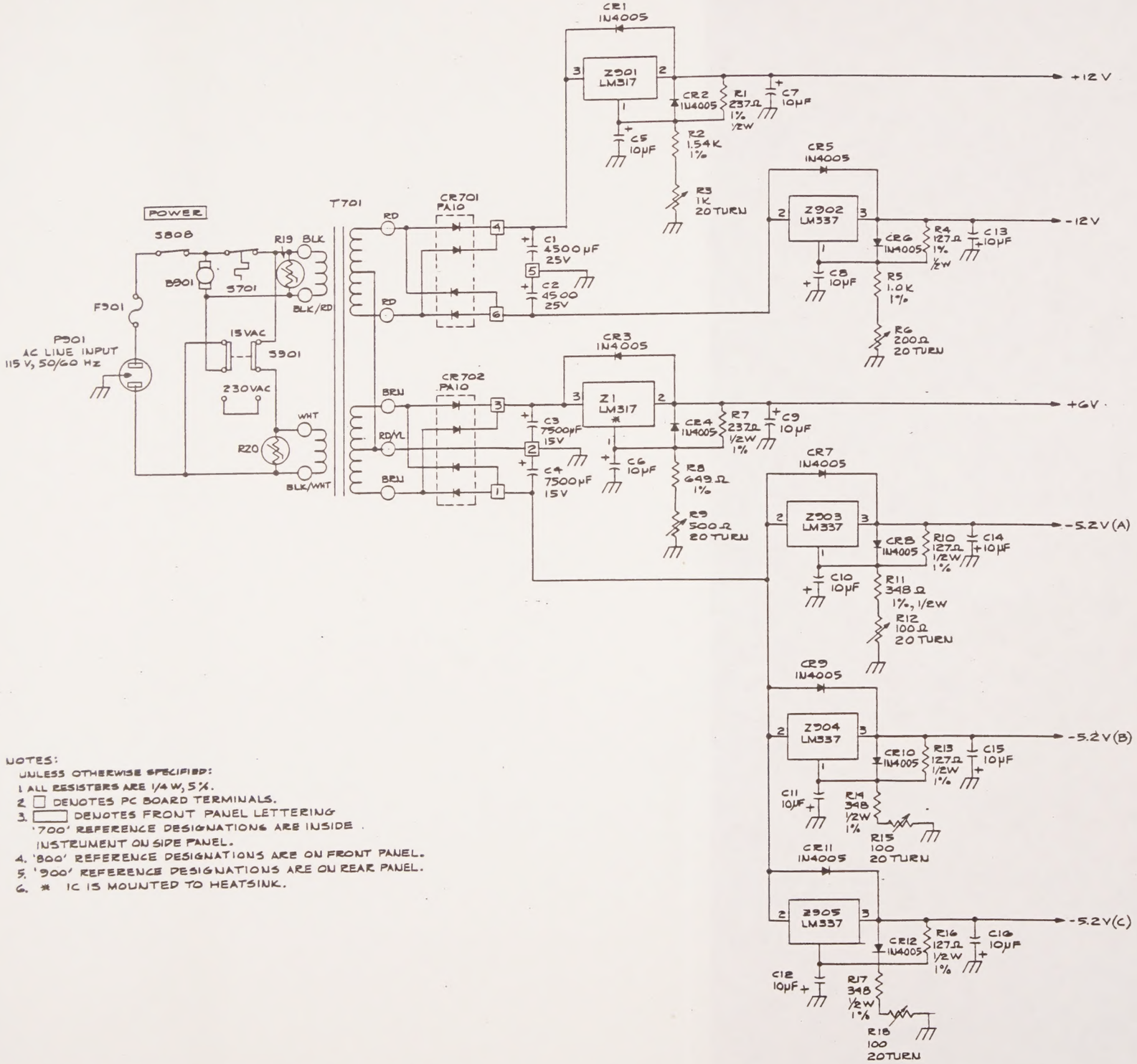

NOTES:
UNLESS OTHERWISE SPECIFIED:
1. ALL RESISTERS ARE 1/4 W, 5%.
2. □ DENOTES PC BOARD TERMINALS.
3. ▭ DENOTES FRONT PANEL LETTERING '700' REFERENCE DESIGNATIONS ARE INSIDE INSTRUMENT ON SIDE PANEL.
4. '800' REFERENCE DESIGNATIONS ARE ON FRONT PANEL.
5. '900' REFERENCE DESIGNATIONS ARE ON REAR PANEL.
6. * IC IS MOUNTED TO HEATSINK.

REFERENCE: PCB 6020-3

Z901	Z905	
Z1	Z1	
T701	T701	
S901	S901	
S808	S808	
S701	S701	
R1	R20	
P901	P901	
F901	F901	
CR701	CR702	
CR1	CR12	
C1	C16	
B901	B901	
FIRST	LAST	OMITTED

REFERENCE DESIGNATIONS

BNC BERKELEY NUCLEONICS CORP.
1198 TENTH ST. BERKELEY, CA 94710

SCALE -NA-	APPROVED BY EWP	DRAWN BY JWC	
DATE 4/18/85		REVISED	

LIGHT PULSE GENERATOR: 6030

POWER SUPPLY | D | DRAWING NUMBER 6030-37

MP MASTER
MA31867